PIAGGIO GROUP

# SPARE PARTS CATALOGUE

## Vespa S 50 4T 4V College
## NOABS E2 2008 - 2014 (NAFTA)

Chassis prefix: ZAPC386B

*Vespa S 50* **EVP6000US1**

Engine prefix: C387M

*Vespa S 50* **EVP6000US1**

# Index

Finished products....5
Alphanumeric index....6
Engine....11
Table 01.02 - Engine, assembly....11
Table 01.05 - Crankcase....12
Table 01.06 - Crankshaft....13
Table 01.07 - Cylinder-piston-wrist pin unit....14
Table 01.10 - Head unit - Valve....15
Table 01.11 - Rocking levers support unit....16
Table 01.12 - Cylinder head cover....17
Table 01.13 - Driving pulley....18
Table 01.14 - Driven pulley....19
Table 01.15 - Crankcase cover - Crankcase cooling....20
Table 01.18 - Oil pump....21
Table 01.20 - Stater - Electric starter....23
Table 01.21 - Flywheel magneto....24
Table 01.23 - Flywheel magneto cover - Oil filter....25
Table 01.25 - Reduction unit....26
Table 01.35 - Rear brake - Brake jaw....27
Table 01.39 - Carburettor, assembly - Union pipe....28
Table 01.40 - Carburetor's components....29
Table 01.42 - Silencer....30
Table 01.45 - Air filter....31
Table 01.46 - Secondary air box....32
Frame - Plastic parts - Coachwork....33
Table 02.01 - Frame/bodywork....33
Table 02.25 - Stand/s....34
Table 02.26 - Front shield....35
Table 02.30 - Front glove-box - Knee-guard panel....37
Table 02.31 - Central cover - Footrests....40
Table 02.32 - Side cover - Spoiler....42
Table 02.33 - Wheel huosing - Mudguard....46
Table 02.34 - Helmet huosing - Undersaddle....48
Table 02.37 - Rear cover - Splash guard....49
Table 02.38 - Plates - Emblems....51
Table 02.39 - Saddle/seats....52
Table 02.45 - Driving mirror/s....53
Table 02.46 - Locks....54
Table 02.47 - Fuel tank....55
Handlebars/Steering....56
Table 03.01 - Handlebars coverages....56
Table 03.02 - Meter combination - Cruscotto....58
Table 03.06 - Handlebars - Master cil....59

Suspensions - Wheels..... 60
Table 04.01 - Swinging arm..... 60
Table 04.02 - Fork/steering tube - Steering bearing unit..... 61
Table 04.10 - Rear suspension - Shock absorber/s..... 63
Table 04.11 - Front wheel..... 64
Table 04.12 - Rear wheel..... 65
Braking system - Transmissions..... 66
Table 05.01 - Brakes pipes - Calipers..... 66
Table 05.03 - Transmissions..... 67
Electrical system..... 68
Table 06.01 - Selectors - Switches - Buttons..... 68
Table 06.03 - Front headlamps - Turn signal lamps..... 69
Table 06.04 - Rear headlamps - Turn signal lamps..... 71
Table 06.05 - Remote control switches - Battery - Horn..... 72
Table 06.06 - Voltage Regulators - Electronic Control Units (ecu) - H.T. Coil..... 73
Table 06.08 - Main cable harness..... 74

# Finished products

| Code | Validity |
|---|---|
| EVP69ZNUS1 | **Colour:**Shiny Black[94] |
| EVP69ZNUS5 | **Colour:**Shiny Black[94] |
| EVP69ZNUS7 | **Colour:**Shiny Black[94] |
| EVP69ZNUSA | **Colour:**Shiny Black[94] |
| EVP6ABNUS4 | **Colour:**White/Blue College[544 - 231/A] |
| EVP6AINUS1 | **Colour:**Mizar Orange[938/A] |
| EVP6BRNUS1 | **Colour:**White[544] |
| EVP6BRNUS5 | **Colour:**White[544] |
| EVP6BRNUS7 | **Colour:**White[544] |
| EVP6BRNUSA | **Colour:**White[544] |
| EVP6DINUS5 | **Colour:**Pastel blue[244/A] |
| EVP6DINUS7 | **Colour:**Pastel blue[244/A] |
| EVP6NLNUS8 | **Colour:**Semi glossy black[85/B] |
| EVP6NLNUS9 | **Colour:**Semi glossy black[85/B] |
| EVP6RBNUS4 | **Colour:**White/Red College[544 - 894] |
| EVP6RBNUS6 | **Colour:**White/Red College[544 - 894] |
| EVP6RZNUS1 | **Colour:**DRAGON RED[894] |
| EVP6RZNUS5 | **Colour:**DRAGON RED[894] |
| EVP6RZNUS7 | **Colour:**DRAGON RED[894] |
| EVP6RZNUSA | **Colour:**DRAGON RED[894] |

| Code | No. table | Pos. |
|---|---|---|
| 000267 | 01.21 | 5 |
| 000397 | 01.05 | 19 |
| 002440 | 02.25 | 3 |
| 002440 | 04.01 | 6 |
| 002440 | 04.10 | 7 |
| 003054 | 06.01 | 6 |
| 003055 | 06.03 | 25 |
| 003056 | 01.45 | 12 |
| 003058 | 05.01 | 10 |
| 0037514 | 04.02 | 42 |
| 004021 | 01.11 | 6 |
| 006078 | 01.39 | 18 |
| 006078 | 06.03 | 24 |
| 006416 | 01.20 | 13 |
| 006422 | 04.02 | 46 |
| 006624 | 01.14 | 13 |
| 006632 | 01.11 | 9 |
| 006635 | 04.02 | 29 |
| 006647 | 01.05 | 20 |
| 006731 | 04.02 | 4 |
| 006965 | 06.03 | 13 |
| 006975 | 05.03 | 16 |
| 006976 | 06.03 | 11 |
| 008372 | 02.37 | 10 |
| 008372 | 06.04 | 10 |
| 008432 | 02.26 | 18 |
| 008457 | 03.01 | 4 |
| 008457 | 06.03 | 19 |
| 00H02500272 | 01.42 | 8 |
| 0111094 | 04.02 | 43 |
| 012112 | 01.39 | 19 |
| 012112 | 06.03 | 26 |
| 012528 | 06.05 | 12 |
| 012533 | 01.45 | 11 |
| 012533 | 02.33 | 16 |
| 012535 | 04.02 | 13 |
| 012543 | 03.06 | 3 |
| 012554 | 06.06 | 7 |
| 012789 | 04.02 | 32 |
| 012789 | 04.12 | 5 |
| 013763 | 02.37 | 14 |
| 013763 | 02.37 | 7 |
| 013769 | 06.04 | 5 |
| 013880 | 02.33 | 17 |
| 013880 | 02.47 | 4 |
| 015014 | 06.06 | 13 |
| 015330 | 03.06 | 5 |
| 015585 | 01.11 | 5 |
| 015715 | 06.03 | 10 |
| 015727 | 02.33 | 2 |
| 015792 | 04.11 | 2 |
| 015804 | 02.33 | 15 |
| 015856 | 01.21 | 6 |
| 015856 | 01.46 | 15 |
| 015900 | 02.33 | 7 |
| 015911 | 02.31 | 5 |
| 015996 | 02.37 | 13 |
| 015996 | 06.04 | 4 |
| 016060 | 01.10 | 3 |
| 016404 | 01.20 | 6 |
| 016404 | 02.37 | 15 |
| 016406 | 02.47 | 3 |
| 016406 | 06.05 | 6 |
| 016406 | 06.06 | 15 |
| 016408 | 04.02 | 18 |
| 016408 | 04.10 | 3 |
| 018509 | 02.01 | 4 |

| Code | No. table | Pos. |
|---|---|---|
| 018544 | 02.26 | 11 |
| 018631 | 06.03 | 12 |
| 018639 | 01.20 | 2 |
| 018639 | 01.39 | 6 |
| 018639 | 02.47 | 2 |
| 018640 | 01.45 | 10 |
| 018644 | 01.20 | 5 |
| 020003 | 06.06 | 8 |
| 020104 | 02.37 | 16 |
| 020108 | 04.02 | 17 |
| 021108 | 04.10 | 2 |
| 021114 | 04.02 | 31 |
| 021210 | 04.02 | 11 |
| 030039 | 01.39 | 22 |
| 030115 | 02.25 | 2 |
| 031058 | 05.03 | 17 |
| 031089 | 01.18 | 26 |
| 031089 | 06.08 | 8 |
| 031120 | 04.02 | 16 |
| 071671 | 06.06 | 10 |
| 080341 | 06.06 | 11 |
| 090958 | 02.47 | 9 |
| 092517 | 04.02 | 39 |
| 097734 | 02.01 | 5 |
| 119219 | 04.02 | 5 |
| 122781 | 04.01 | 8 |
| 123394 | 03.06 | 11 |
| 123394 | 03.06 | 18 |
| 127927 | 05.01 | 3 |
| 127927 | 05.01 | 5 |
| 129953 | 06.04 | 3 |
| 145298 | 01.20 | 4 |
| 145298 | 01.39 | 21 |
| 145298 | 02.47 | 16 |
| 145298 | 05.03 | 13 |
| 145298 | 05.03 | 9 |
| 145298 | 06.06 | 14 |
| 145298 | 06.08 | 10 |
| 145298 | 06.08 | 6 |
| 149104 | 04.02 | 10 |
| 164634 | 03.02 | 5 |
| 174085 | 04.02 | 8 |
| 174088 | 04.02 | 12 |
| 174874 | 04.02 | 9 |
| 177408 | 04.02 | 44 |
| 177414 | 04.02 | 47 |
| 177436 | 04.02 | 20 |
| 177442 | 04.02 | 25 |
| 177443 | 04.02 | 26 |
| 177445 | 04.02 | 45 |
| 177451 | 04.02 | 2 |
| 177494 | 04.02 | 21 |
| 177521 | 04.02 | 41 |
| 177609 | 04.02 | 30 |
| 177610 | 04.02 | 27 |
| 178150 | 04.10 | 5 |
| 178790 | 04.01 | 9 |
| 179640 | 05.03 | 3 |
| 181351 | 02.32 | 2 |
| 181351 | 02.32 | 5 |
| 181351 | 02.33 | 13 |
| 181746 | 06.03 | 28 |
| 181746 | 06.03 | 31 |
| 181747 | 06.03 | 16 |
| 181747 | 06.03 | 18 |
| 182302 | 02.34 | 8 |
| 192598 | 02.33 | 3 |

| Code | No. table | Pos. |
|---|---|---|
| 194423 | 04.12 | 4 |
| 196868 | 02.47 | 10 |
| 198513 | 04.02 | 3 |
| 199190 | 02.26 | 12 |
| 199190 | 02.31 | 6 |
| 199190 | 02.32 | 10 |
| 1B001078 | 02.38 | 22 |
| 217280 | 06.06 | 17 |
| 217280 | 06.08 | 9 |
| 229892 | 03.02 | 5 |
| 239388 | 01.05 | 7 |
| 239388 | 01.07 | 9 |
| 239388 | 01.15 | 5 |
| 239388 | 01.25 | 2 |
| 248419 | 01.39 | 23 |
| 248419 | 02.30 | 10 |
| 252945 | 06.08 | 3 |
| 253366 | 03.02 | 6 |
| 253937 | 02.46 | 2 |
| 254485 | 01.45 | 13 |
| 254485 | 02.31 | 12 |
| 254485 | 02.33 | 18 |
| 254485 | 02.34 | 12 |
| 254485 | 02.37 | 3 |
| 254485 | 02.47 | 5 |
| 254485 | 04.02 | 34 |
| 257134 | 01.39 | 8 |
| 257134 | 05.03 | 8 |
| 257134 | 06.06 | 18 |
| 258146 | 01.45 | 4 |
| 258146 | 03.01 | 5 |
| 259151 | 01.46 | 7 |
| 259349 | 02.30 | 2 |
| 259349 | 02.30 | 7 |
| 259349 | 02.31 | 2 |
| 259349 | 02.31 | 5 |
| 259349 | 02.32 | 9 |
| 259349 | 02.34 | 3 |
| 259349 | 06.05 | 3 |
| 259577 | 01.12 | 11 |
| 259830 | 02.37 | 2 |
| 261319 | 04.01 | 4 |
| 265249 | 03.06 | 16 |
| 265300 | 01.13 | 10 |
| 265451 | 05.01 | 2 |
| 265451 | 05.01 | 4 |
| 266040 | 05.03 | 12 |
| 266625 | 01.05 | 4 |
| 266724 | 01.35 | 2 |
| 267038 | 04.10 | 4 |
| 267818 | 04.02 | 23 |
| 267819 | 04.02 | 37 |
| 267823 | 01.05 | 5 |
| 267917 | 03.06 | 4 |
| 267948 | 03.06 | 17 |
| 268158 | 04.10 | 6 |
| 268596 | 02.26 | 7 |
| 269755 | 01.05 | 18 |
| 270310 | 05.03 | 2 |
| 270793 | 01.12 | 12 |
| 270793 | 03.01 | 6 |
| 270793 | 06.01 | 5 |
| 270793 | 06.03 | 6 |
| 270991 | 04.11 | 4 |
| 270991 | 04.12 | 6 |
| 271779 | 04.01 | 5 |
| 271891 | 02.31 | 11 |

| Code | No. table | Pos. |
|---|---|---|
| 271891 | 02.34 | 13 |
| 272836 | 02.01 | 6 |
| 272921 | 01.05 | 6 |
| 273099 | 04.12 | 2 |
| 273419 | 01.35 | 4 |
| 273693 | 04.02 | 15 |
| 273754 | 02.25 | 5 |
| 274245 | 01.35 | 3 |
| 274489 | 03.06 | 10 |
| 274491 | 03.06 | 7 |
| 277916 | 01.10 | 13 |
| 285536 | 01.23 | 2 |
| 286209 | 01.15 | 4 |
| 287913 | 01.18 | 5 |
| 2879633 | 01.18 | 17 |
| 288245 | 02.33 | 5 |
| 288474 | 01.23 | 4 |
| 288548 | 01.23 | 1 |
| 288639 | 01.25 | 6 |
| 289005 | 01.21 | 7 |
| 289202 | 01.20 | 7 |
| 289495 | 01.20 | 11 |
| 289519 | 01.13 | 11 |
| 289840 | 01.14 | 9 |
| 289931 | 01.13 | 2 |
| 289933 | 01.14 | 15 |
| 289950 | 01.14 | 8 |
| 289952 | 01.14 | 12 |
| 289955 | 01.14 | 3 |
| 290404 | 06.08 | 4 |
| 290405 | 02.34 | 7 |
| 290860 | 06.08 | 3 |
| 292022 | 02.37 | 22 |
| 292507 | 06.08 | 3 |
| 294678 | 02.37 | 10 |
| 294723 | 06.01 | 2 |
| 294877 | 06.01 | 1 |
| 296456 | 02.39 | 2 |
| 296743 | 02.39 | 3 |
| 297498 | 02.26 | 14 |
| 297498 | 02.30 | 3 |
| 297498 | 02.31 | 13 |
| 297498 | 02.32 | 8 |
| 297498 | 02.37 | 6 |
| 297498 | 03.02 | 10 |
| 298548 | 01.15 | 11 |
| 298581 | 02.46 | 1 |
| 298594 | 02.46 | 5 |
| 298604 | 02.01 | 2 |
| 298729 | 02.39 | 4 |
| 298729 | 05.03 | 6 |
| 298731 | 02.46 | 7 |
| 298838 | 02.46 | 4 |
| 298903 | 02.46 | 3 |
| 299047 | 02.34 | 4 |
| 299557 | 02.32 | 16 |
| 299558 | 02.32 | 17 |
| 299559 | 02.32 | 18 |
| 299964 | 02.26 | 4 |
| 299965 | 02.26 | 3 |
| 319242 | 01.10 | 11 |
| 414837 | 01.18 | 10 |
| 414837 | 01.20 | 15 |
| 414837 | 05.03 | 4 |
| 430264 | 01.12 | 3 |
| 430535 | 01.18 | 21 |
| 431242 | 01.23 | 3 |

| Code | No. table | Pos. |
|---|---|---|
| 431860 | 01.05 | 8 |
| 431860 | 01.15 | 3 |
| 433477 | 01.18 | 2 |
| 433987 | 01.20 | 12 |
| 434345 | 01.18 | 16 |
| 434447 | 01.18 | 8 |
| 434735 | 01.05 | 2 |
| 434943 | 01.11 | 10 |
| 434947 | 01.18 | 4 |
| 435251 | 01.15 | 13 |
| 435251 | 01.20 | 16 |
| 435295 | 01.15 | 10 |
| 435363 | 01.25 | 3 |
| 436695 | 01.11 | 13 |
| 436695 | 01.18 | 6 |
| 436751 | 01.18 | 3 |
| 463195 | 02.32 | 11 |
| 478028 | 01.14 | 5 |
| 478197 | 01.25 | 5 |
| 478247 | 01.18 | 27 |
| 4783245 | 01.18 | 15 |
| 478498 | 01.05 | 21 |
| 478533 | 01.46 | 3 |
| 478895 | 01.05 | 13 |
| 479132 | 01.45 | 5 |
| 4795526 | 01.14 | 11 |
| 479561 | 01.13 | 7 |
| 4795935 | 01.25 | 9 |
| 479986 | 01.18 | 14 |
| 480066 | 01.25 | 10 |
| 480227 | 01.13 | 3 |
| 480230 | 01.13 | 5 |
| 480953 | 01.25 | 11 |
| 482291 | 01.15 | 6 |
| 482766 | 01.14 | 10 |
| 483443 | 01.14 | 6 |
| 483537 | 01.20 | 9 |
| 483785 | 01.05 | 11 |
| 484123 | 01.05 | 15 |
| 484123 | 01.18 | 19 |
| 484123 | 01.21 | 9 |
| 484123 | 06.05 | 13 |
| 486081 | 01.05 | 12 |
| 4874805 | 01.25 | 1 |
| 487665 | 01.39 | 17 |
| 487824 | 01.18 | 11 |
| 487935 | 01.14 | 4 |
| 497042 | 03.06 | 13 |
| 497555 | 01.02 | 2 |
| 497556 | 01.02 | 3 |
| 497616 | 01.11 | 4 |
| 498342 | 03.02 | 4 |
| 5048285 | 01.02 | 1 |
| 560045 | 04.01 | 7 |
| 560284 | 04.02 | 22 |
| 5602865 | 04.02 | 19 |
| 561433 | 04.02 | 40 |
| 56204R | 04.01 | 1 |
| 562310 | 04.01 | 10 |
| 562919 | 02.33 | 6 |
| 562923 | 03.06 | 8 |
| 563321 | 04.01 | 11 |
| 56365R | 04.12 | 1 |
| 563728 | 04.12 | 3 |
| 56395R | 04.02 | 24 |
| 563984 | 02.25 | 8 |
| 564217 | 05.03 | 10 |

| Code | No. table | Pos. |
|---|---|---|
| 564497 | 05.03 | 5 |
| 564683 | 03.06 | 15 |
| 573052 | 01.39 | 7 |
| 57345R | 02.31 | 8 |
| 573905 | 02.46 | 6 |
| 573960 | 02.46 | 8 |
| 575249 | 02.33 | 20 |
| 575249 | 02.37 | 4 |
| 575321 | 02.47 | 8 |
| 575819 | 02.30 | 4 |
| 576017 | 02.34 | 2 |
| 576464 | 02.38 | 1 |
| 576702 | 02.38 | 9 |
| 576704 | 02.38 | 10 |
| 576705 | 02.38 | 8 |
| 576707 | 02.38 | 11 |
| 576708 | 02.38 | 12 |
| 576953 | 02.38 | 13 |
| 577492 | 02.39 | 5 |
| 577557 | 02.47 | 11 |
| 580653 | 06.08 | 2 |
| 58115R | 06.05 | 1 |
| 58120R | 06.06 | 9 |
| 58176R | 06.04 | 8 |
| 58177R | 06.04 | 6 |
| 582060 | 02.25 | 1 |
| 582298 | 02.25 | 4 |
| 58233R | 02.32 | 12 |
| 58233R | 02.37 | 11 |
| 58246R | 06.05 | 2 |
| 582504 | 02.25 | 6 |
| 582505 | 02.25 | 7 |
| 582619 | 06.08 | 11 |
| 58264R | 06.04 | 1 |
| 582691 | 02.37 | 12 |
| 583236 | 06.06 | 6 |
| 583310 | 02.34 | 5 |
| 583575 | 06.01 | 9 |
| 584078 | 02.33 | 9 |
| 584079 | 02.33 | 11 |
| 584083 | 02.33 | 10 |
| 584084 | 02.33 | 12 |
| 584332 | 06.04 | 7 |
| 584332 | 06.04 | 9 |
| 584599 | 06.01 | 7 |
| 584810 | 06.05 | 5 |
| 58579R | 04.11 | 1 |
| 58580R | 04.12 | 1 |
| 58581R | 04.02 | 7 |
| 58624R | 04.11 | 1 |
| 58625R | 04.12 | 1 |
| 597150 | 05.01 | 8 |
| 597914 | 04.01 | 2 |
| 598918 | 05.03 | 11 |
| 599677 | 02.33 | 19 |
| 601556 | 04.02 | 15 |
| 620556 | 02.32 | 15 |
| 6221145 | 02.01 | 9 |
| 6221244090 | 02.31 | 1 |
| 62212440AH | 02.31 | 1 |
| 62212440AI | 02.31 | 1 |
| 62212440BR | 02.31 | 1 |
| 62212440DI | 02.31 | 1 |
| 62212440NL | 02.31 | 1 |
| 62212440R7 | 02.31 | 1 |
| 622125 | 02.31 | 9 |
| 622126 | 02.31 | 10 |

| Code | No. table | Pos. |
|---|---|---|
| 6221294090 | 02.32 | 13 |
| 62212940AI | 02.32 | 13 |
| 62212940BR | 02.32 | 13 |
| 62212940DI | 02.32 | 13 |
| 62212940NL | 02.32 | 13 |
| 62212940R7 | 02.32 | 13 |
| 6221304090 | 02.32 | 14 |
| 62213040AI | 02.32 | 14 |
| 62213040BR | 02.32 | 14 |
| 62213040DI | 02.32 | 14 |
| 62213040NL | 02.32 | 14 |
| 62213040R7 | 02.32 | 14 |
| 6221365090 | 02.31 | 4 |
| 62213650AI | 02.31 | 4 |
| 62213650BR | 02.31 | 4 |
| 62213650DI | 02.31 | 4 |
| 62213650NL | 02.31 | 4 |
| 62213650R7 | 02.31 | 4 |
| 6221366 | 02.31 | 4 |
| 622187 | 02.26 | 2 |
| 622188 | 02.26 | 1 |
| 623420 | 02.37 | 5 |
| 624933 | 02.47 | 12 |
| 638953 | 01.21 | 2 |
| 639082 | 06.08 | 12 |
| 6391015 | 06.03 | 30 |
| 6391025 | 06.03 | 27 |
| 639296 | 06.03 | 15 |
| 639297 | 06.03 | 17 |
| 639335 | 02.37 | 9 |
| 639340 | 06.05 | 11 |
| 639498 | 06.06 | 12 |
| 639632 | 01.39 | 20 |
| 639640 | 06.05 | 10 |
| 640722 | 03.02 | 1 |
| 640800 | 06.03 | 8 |
| 640801 | 06.03 | 9 |
| 640813 | 06.04 | 2 |
| 640923 | 06.03 | 22 |
| 640924 | 06.03 | 21 |
| 641237 | 06.06 | 5 |
| 641290 | 01.39 | 14 |
| 641387 | 01.12 | 16 |
| 641396 | 06.03 | 1 |
| 641397 | 06.03 | 2 |
| 641402 | 06.08 | 1 |
| 641407 | 03.02 | 1 |
| 641609 | 06.01 | 3 |
| 641743 | 06.01 | 4 |
| 641788 | 06.06 | 1 |
| 642076 | 06.08 | 5 |
| 643133 | 06.01 | 8 |
| 647073 | 05.01 | 7 |
| 647384 | 01.35 | 5 |
| 6483975 | 04.02 | 6 |
| 6484135 | 04.02 | 1 |
| 649871 | 05.01 | 1 |
| 6500754 | 04.02 | 33 |
| 650477 | 03.06 | 9 |
| 650540 | 02.39 | 8 |
| 6506934 | 04.02 | 38 |
| 650836 | 05.03 | 1 |
| 653005 | 02.47 | 1 |
| 653994 | 02.39 | 6 |
| 654149 | 02.45 | 4 |
| 65425600AH | 02.30 | 1 |
| 654261 | 02.37 | 1 |

| Code | No. table | Pos. |
|---|---|---|
| 6542610090 | 02.37 | 1 |
| 65426100AH | 02.37 | 1 |
| 65426100AI | 02.37 | 1 |
| 65426100BR | 02.37 | 1 |
| 65426100DI | 02.37 | 1 |
| 65426100NL | 02.37 | 1 |
| 65426100R7 | 02.37 | 1 |
| 654262 | 02.37 | 8 |
| 6542620090 | 02.37 | 8 |
| 65426200AH | 02.37 | 8 |
| 65426200AI | 02.37 | 8 |
| 65426200BR | 02.37 | 8 |
| 65426200DI | 02.37 | 8 |
| 65426200NL | 02.37 | 8 |
| 65426200R7 | 02.37 | 8 |
| 654263 | 03.01 | 1 |
| 6542630090 | 03.01 | 1 |
| 65426300AI | 03.01 | 1 |
| 65426300BR | 03.01 | 1 |
| 65426300DI | 03.01 | 1 |
| 65426300NL | 03.01 | 1 |
| 65426300R7 | 03.01 | 1 |
| 654264 | 03.01 | 2 |
| 6542640090 | 03.01 | 2 |
| 65426400AH | 03.01 | 2 |
| 65426400AI | 03.01 | 2 |
| 65426400BR | 03.01 | 2 |
| 65426400DI | 03.01 | 2 |
| 65426400NL | 03.01 | 2 |
| 65426400R7 | 03.01 | 2 |
| 654265 | 03.01 | 7 |
| 6542675 | 03.06 | 1 |
| 654268 | 04.02 | 36 |
| 654271 | 06.03 | 3 |
| 654272 | 02.26 | 15 |
| 654276 | 06.03 | 7 |
| 654279 | 03.02 | 7 |
| 654282 | 02.01 | 8 |
| 654290 | 02.30 | 13 |
| 654292 | 02.30 | 12 |
| 65429300AI | 02.39 | 1 |
| 65429300AN | 02.39 | 1 |
| 65429300C1 | 02.39 | 1 |
| 65429300C2 | 02.39 | 1 |
| 654294 | 02.30 | 6 |
| 6542940090 | 02.30 | 6 |
| 65429400AH | 02.30 | 6 |
| 65429400AI | 02.30 | 6 |
| 65429400BR | 02.30 | 6 |
| 65429400DI | 02.30 | 6 |
| 65429400NL | 02.30 | 6 |
| 65429400R7 | 02.30 | 6 |
| 654295 | 02.30 | 5 |
| 6542950090 | 02.30 | 5 |
| 65429500AH | 02.30 | 5 |
| 65429500AI | 02.30 | 5 |
| 65429500BR | 02.30 | 5 |
| 65429500DI | 02.30 | 5 |
| 65429500NL | 02.30 | 5 |
| 65429500R7 | 02.30 | 5 |
| 654297 | 02.30 | 11 |
| 654298 | 03.02 | 9 |
| 654300 | 03.02 | 8 |
| 654301 | 06.03 | 5 |
| 6543060090 | 02.32 | 6 |
| 65430600AH | 02.32 | 6 |
| 65430600AI | 02.32 | 6 |

| Code | No. table | Pos. |
|---|---|---|
| 65430600BR | 02.32 | 6 |
| 65430600R7 | 02.32 | 6 |
| 6543070090 | 02.32 | 3 |
| 65430700AI | 02.32 | 3 |
| 65430700BR | 02.32 | 3 |
| 65430700R7 | 02.32 | 3 |
| 6547350090 | 02.32 | 4A |
| 65473500AH | 02.32 | 4A |
| 65473500AI | 02.32 | 4A |
| 65473500BR | 02.32 | 4A |
| 65473500R7 | 02.32 | 4A |
| 654736 | 02.32 | 1A |
| 6547360090 | 02.32 | 1A |
| 65473600AH | 02.32 | 1A |
| 65473600AI | 02.32 | 1A |
| 65473600BR | 02.32 | 1A |
| 65473600R7 | 02.32 | 1A |
| 654821 | 02.38 | 5 |
| 654876 | 06.03 | 14 |
| 65488300DI | 02.26 | 9 |
| 6548835090 | 02.26 | 9 |
| 65488350AI | 02.26 | 9 |
| 65488350BR | 02.26 | 9 |
| 65488350R7 | 02.26 | 9 |
| 6548904 | 06.03 | 4 |
| 654899 | 02.26 | 6 |
| 654913 | 02.26 | 5 |
| 655115 | 02.45 | 3 |
| 655554 | 03.06 | 2 |
| 656021 | 02.47 | 7 |
| 656022 | 02.47 | 6 |
| 656219 | 02.38 | 3 |
| 656220 | 02.38 | 2 |
| 656228 | 02.38 | 7 |
| 656229 | 02.38 | 4 |
| 656230 | 02.38 | 6 |
| 65624301 | 02.01 | 1 |
| 6562435090 | 02.01 | 1 |
| 65624350AI | 02.01 | 1 |
| 656303 | 02.34 | 6 |
| 657126 | 02.31 | 7 |
| 65759000A1 | 02.38 | 14 |
| 65759000A2 | 02.38 | 14 |
| 665701 | 04.02 | 48 |
| 665701 | 05.01 | 11 |
| 665844 | 05.03 | 10 |
| 666530 | 02.33 | 1 |
| 6665300090 | 02.33 | 1 |
| 66653000AI | 02.33 | 1 |
| 66653000BR | 02.33 | 1 |
| 66653000DI | 02.33 | 1 |
| 66653000NL | 02.33 | 1 |
| 66653000R7 | 02.33 | 1 |
| 667152 | 04.02 | 28 |
| 668067 | 04.10 | 1 |
| 668616 | 04.11 | 5 |
| 668617 | 04.12 | 7 |
| 672200 | 02.38 | 21 |
| 672325 | 02.32 | 4B |
| 6723250090 | 02.32 | 4B |
| 67232500AH | 02.32 | 4B |
| 67232500AI | 02.32 | 4B |
| 67232500BR | 02.32 | 4B |
| 67232500DI | 02.32 | 4B |
| 67232500NL | 02.32 | 4B |
| 67232500R7 | 02.32 | 4B |
| 672326 | 02.32 | 1B |

| Code | No. table | Pos. |
|---|---|---|
| 6723260090 | 02.32 | 1B |
| 67232600AH | 02.32 | 1B |
| 67232600AI | 02.32 | 1B |
| 67232600BR | 02.32 | 1B |
| 67232600DI | 02.32 | 1B |
| 67232600NL | 02.32 | 1B |
| 67232600R7 | 02.32 | 1B |
| 67327600C1 | 02.39 | 1 |
| 674887 | 02.33 | 14 |
| 6749505090 | 02.01 | 1 |
| 67495050BR | 02.01 | 1 |
| 67495050DI | 02.01 | 1 |
| 67495050NL | 02.01 | 1 |
| 67495050R7 | 02.01 | 1 |
| 674954 | 02.30 | 1 |
| 6749540090 | 02.30 | 1 |
| 67495400AI | 02.30 | 1 |
| 67495400BR | 02.30 | 1 |
| 67495400DI | 02.30 | 1 |
| 67495400NL | 02.30 | 1 |
| 67495400R7 | 02.30 | 1 |
| 675041 | 02.31 | 8 |
| 675266 | 02.34 | 1 |
| 675323 | 02.26 | 19 |
| 6753230090 | 02.26 | 19 |
| 67532300BR | 02.26 | 19 |
| 67532300DI | 02.26 | 19 |
| 67532300NL | 02.26 | 19 |
| 67532340R7 | 02.26 | 19 |
| 675324 | 02.26 | 16 |
| 675325 | 02.26 | 17 |
| 675445 | 03.02 | 7 |
| 675525 | 02.33 | 19 |
| 680156 | 03.02 | 2 |
| 709037 | 04.01 | 3 |
| 709047 | 02.33 | 21 |
| 709047 | 04.02 | 14 |
| 709047 | 04.11 | 3 |
| 709047 | 05.01 | 9 |
| 709519 | 01.15 | 8 |
| 709532 | 01.39 | 10 |
| 709532 | 01.39 | 3 |
| 709532 | 01.45 | 14 |
| 82521R | 01.15 | 2 |
| 8252515 | 01.25 | 8 |
| 8262165 | 01.25 | 7 |
| 82622R | 01.10 | 14 |
| 82645R | 01.13 | 6 |
| 82650R | 01.18 | 28 |
| 82655R | 01.14 | 14 |
| 82671R | 01.05 | 3 |
| 827085 | 01.05 | 17 |
| 82758R | 01.46 | 5 |
| 827831 | 01.45 | 6 |
| 827893 | 01.14 | 7 |
| 82798R | 01.21 | 1 |
| 828561 | 01.18 | 25 |
| 828662 | 01.12 | 13 |
| 828825 | 01.40 | 14 |
| 828844 | 01.40 | 6 |
| 828862 | 01.35 | 7 |
| 828863 | 01.35 | 8 |
| 82907R | 01.35 | 1 |
| 82961R | 01.39 | 9 |
| 830056 | 01.45 | 8 |
| 830061 | 01.39 | 15 |
| 830212 | 01.20 | 10 |

| Code | No. table | Pos. |
|---|---|---|
| 830249 | 01.12 | 5 |
| 830286 | 01.21 | 8 |
| 831458 | 01.20 | 8 |
| 832059 | 01.46 | 13 |
| 832130 | 01.05 | 16 |
| 832971 | 01.46 | 2 |
| 832972 | 01.46 | 6 |
| 832973 | 01.46 | 4 |
| 833472 | 01.46 | 10 |
| 833494 | 01.42 | 7 |
| 833495 | 01.18 | 20 |
| 833632 | 01.21 | 3 |
| 833788 | 01.35 | 6 |
| 834187 | 01.42 | 6 |
| 841622 | 01.40 | 11 |
| 841623 | 01.40 | 13 |
| 841782 | 01.42 | 5 |
| 841821 | 01.42 | 4 |
| 842161 | 01.05 | 10 |
| 842166 | 01.11 | 11 |
| 842174 | 01.11 | 14 |
| 842200 | 01.11 | 1 |
| 842201 | 01.11 | 2 |
| 842360 | 01.10 | 15 |
| 842908 | 01.42 | 3 |
| 843194 | 01.45 | 2 |
| 843195 | 01.45 | 3 |
| 843213 | 01.39 | 16 |
| 843307 | 01.10 | 5 |
| 843338 | 01.10 | 8 |
| 843525 | 01.46 | 8 |
| 843567 | 01.46 | 1 |
| 843849 | 01.45 | 9 |
| 844252 | 06.03 | 23 |
| 844470 | 01.42 | 9 |
| 844721 | 01.18 | 13 |
| 844871 | 01.18 | 9 |
| 844888 | 01.18 | 18 |
| 845339 | 01.12 | 6 |
| 845423 | 01.10 | 1 |
| 845426 | 01.11 | 7 |
| 845465 | 01.42 | 2 |
| 845611 | 01.13 | 8 |
| 845663 | 01.10 | 10 |
| 845737 | 01.39 | 4 |
| 845776 | 01.10 | 2 |
| 845951 | 01.10 | 6 |
| 846014 | 01.10 | 10 |
| 846991 | 01.12 | 15 |
| 846992 | 01.12 | 9 |
| 846993 | 01.12 | 10 |
| 847778 | 01.40 | 22 |
| 847778 | 02.47 | 21 |
| 847928 | 01.18 | 30 |
| 848680 | 01.39 | 2 |
| 8488565 | 01.05 | 1 |
| 848990 | 01.12 | 1 |
| 848993 | 01.12 | 7 |
| 849012 | 01.12 | 2 |
| 871889 | 01.10 | 7 |
| 872272 | 01.10 | 9 |
| 872305 | 01.10 | 4 |
| 872635 | 01.12 | 4 |
| 873270 | 01.39 | 13 |
| 8733655 | 01.15 | 1 |
| 8734660001 | 01.07 | 2 |
| 8734660002 | 01.07 | 2 |

| Code | No. table | Pos. |
|---|---|---|
| 8734660003 | 01.07 | 2 |
| 8734660004 | 01.07 | 2 |
| 873467 | 01.07 | 1 |
| 873979 | 01.21 | 4 |
| 876483 | 01.46 | 12 |
| 876819 | 01.40 | 2 |
| 876820 | 01.40 | 3 |
| 876821 | 01.40 | 1 |
| 876822 | 01.40 | 12 |
| 876823 | 01.40 | 18 |
| 876824 | 01.40 | 19 |
| 876826 | 01.40 | 8 |
| 877075 | 01.13 | 9 |
| 877262 | 01.18 | 1 |
| 878184 | 01.45 | 1 |
| 8804035 | 01.42 | 1 |
| 895839 | 02.38 | 20 |
| 969028 | 01.05 | 9 |
| 969132 | 01.18 | 12 |
| 969213 | 01.07 | 4 |
| 969214 | 01.07 | 3 |
| 969215 | 01.07 | 7 |
| 969216 | 01.07 | 6 |
| 969217 | 01.07 | 5 |
| 96921R | 01.20 | 1 |
| 969224 | 01.10 | 12 |
| 969230 | 01.07 | 8 |
| 96925R | 01.06 | 2 |
| 96926R | 01.11 | 8 |
| 969339 | 01.12 | 14 |
| 96933R | 01.18 | 24 |
| 969347 | 01.20 | 3 |
| 969421 | 01.20 | 14 |
| 969428 | 01.06 | 1 |
| 969625 | 01.05 | 14 |
| 969747 | 01.18 | 22 |
| 969804 | 01.15 | 9 |
| 969877 | 01.18 | 23 |
| AP8144564 | 02.26 | 10 |
| AP8152338 | 02.30 | 9 |
| AP8212406 | 03.02 | 3 |
| B016426 | 01.18 | 29 |
| B016426 | 01.18 | 7 |
| B016426 | 01.46 | 14 |
| B016426 | 02.39 | 7 |
| B016426 | 06.05 | 9 |
| B016763 | 01.25 | 4 |
| B016774 | 05.03 | 4 |
| B016777 | 01.11 | 12 |
| B016777 | 02.01 | 7 |
| B016777 | 06.05 | 8 |
| B016777 | 06.06 | 16 |
| B016777 | 06.06 | 2 |
| B016777 | 06.06 | 4 |
| B016792 | 01.15 | 7 |
| B017633 | 01.35 | 8 |
| CM001209 | 02.47 | 18 |
| CM001901 | 02.47 | 17 |
| CM001903 | 01.46 | 9 |
| CM001904 | 01.12 | 8 |
| CM001905 | 01.46 | 11 |
| CM001912 | 02.47 | 13 |
| CM002901 | 01.39 | 12 |
| CM002901 | 02.47 | 14 |
| CM002904 | 01.39 | 11 |
| CM002910 | 01.45 | 7 |
| CM006903 | 06.08 | 7 |

| Code | No. table | Pos. |
|---|---|---|
| CM006904 | 05.03 | 14 |
| CM013202 | 02.47 | 19 |
| CM013202 | 05.03 | 7 |
| CM013202 | 06.08 | 14 |
| CM017403 | 02.26 | 8 |
| CM017405 | 06.04 | 11 |
| CM017406 | 02.31 | 3 |
| CM017406 | 06.03 | 20 |
| CM017408 | 02.31 | 6 |
| CM017408 | 02.34 | 10 |
| CM017409 | 02.30 | 8 |
| CM017409 | 03.01 | 3 |
| CM017409 | 06.05 | 4 |
| CM017410 | 02.32 | 7 |
| CM017410 | 02.33 | 8 |
| CM017410 | 02.34 | 11 |
| CM017410 | 02.34 | 9 |
| CM025702 | 02.47 | 20 |
| CM027909 | 01.39 | 5 |
| CM027916 | 02.47 | 15 |
| CM060977 | 03.06 | 6 |
| CM060982 | 03.06 | 6 |
| CM063804 | 03.06 | 14 |
| CM065704 | 05.01 | 6 |
| CM071814 | 06.05 | 7 |
| CM074904 | 03.06 | 12 |
| CM077701 | 05.03 | 15 |
| CM083803 | 03.06 | 10 |
| CM083804 | 03.06 | 7 |
| CM088402 | 06.06 | 3 |
| CM100107 | 01.14 | 1 |
| CM1002025 | 01.14 | 2 |
| CM1102035 | 01.13 | 4 |
| CM110304 | 01.13 | 1 |
| CM140212 | 01.40 | 4 |
| CM142101 | 01.40 | 16 |
| CM142302 | 01.40 | 17 |
| CM142914 | 01.40 | 7 |
| CM144319 | 01.11 | 3 |
| CM144320 | 01.11 | 3 |
| CM144321 | 01.11 | 3 |
| CM144322 | 01.11 | 3 |
| CM144323 | 01.11 | 3 |
| CM144324 | 01.11 | 3 |
| CM144325 | 01.11 | 3 |
| CM144326 | 01.11 | 3 |
| CM144327 | 01.11 | 3 |
| CM144328 | 01.11 | 3 |
| CM144329 | 01.11 | 3 |
| CM144330 | 01.11 | 3 |
| CM144331 | 01.11 | 3 |
| CM144332 | 01.11 | 3 |
| CM144333 | 01.11 | 3 |
| CM147102 | 01.40 | 10 |
| CM158005 | 01.39 | 1 |
| CM160102 | 01.40 | 9 |
| CM160201 | 01.40 | 15 |
| CM160301 | 01.40 | 20 |
| CM160802 | 01.40 | 5 |
| CM162903 | 01.40 | 21 |
| CM178601 | 02.30 | 7 |
| CM178601 | 02.31 | 2 |
| CM178603 | 02.30 | 2 |
| CM178603 | 02.32 | 9 |
| CM178608 | 02.34 | 14 |
| CM178901 | 02.45 | 2 |
| CM178902 | 02.45 | 1 |

| Code | No. table | Pos. |
|---|---|---|
| CM179101 | 02.26 | 13 |
| CM179201 | 02.33 | 4 |
| CM179201 | 02.37 | 4 |
| CM179201 | 04.02 | 35 |
| CM179301 | 02.01 | 4 |
| CM179302 | 02.37 | 2 |
| CM179303 | 02.31 | 11 |
| CM179303 | 02.34 | 13 |
| CM179305 | 02.31 | 11 |
| D9004461432 | 01.46 | 16 |

| | |
|---|---|
| **Group** | Engine |
| **Code** | 01.02 |
| **Description** | Engine, assembly |
| **Service** | 1 |

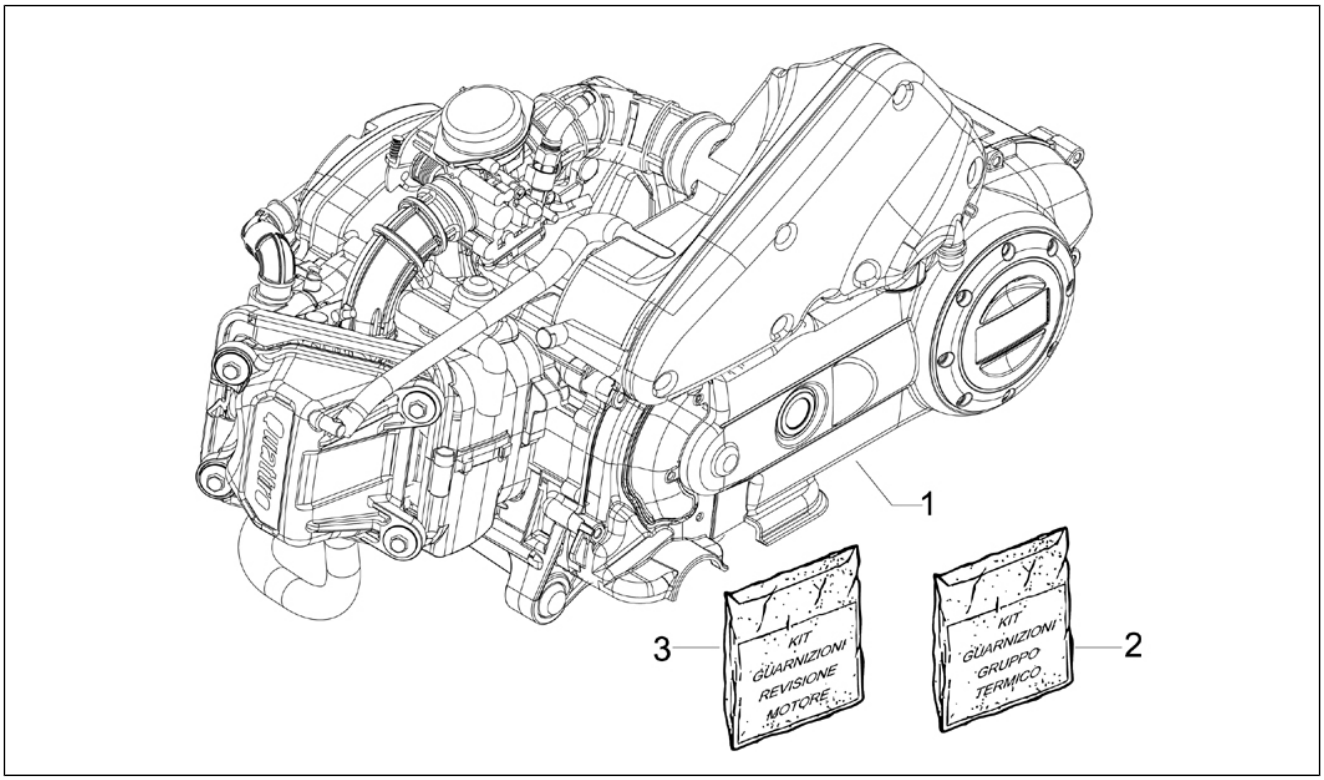


| Pos. | Code | Description | Qty | Variants |
|---|---|---|---|---|
| 1 | 5048285 | Complete motor 50 4T/4V E2 | 1 | |
| 2 | 497555 | Thermal group service gasket kit | 1 | |
| 3 | 497556 | Kit guarnizioni completo | 1 | |

| | |
|---|---|
| **Group** | Engine |
| **Code** | 01.05 |
| **Description** | Crankcase |
| **Service** | 1 |

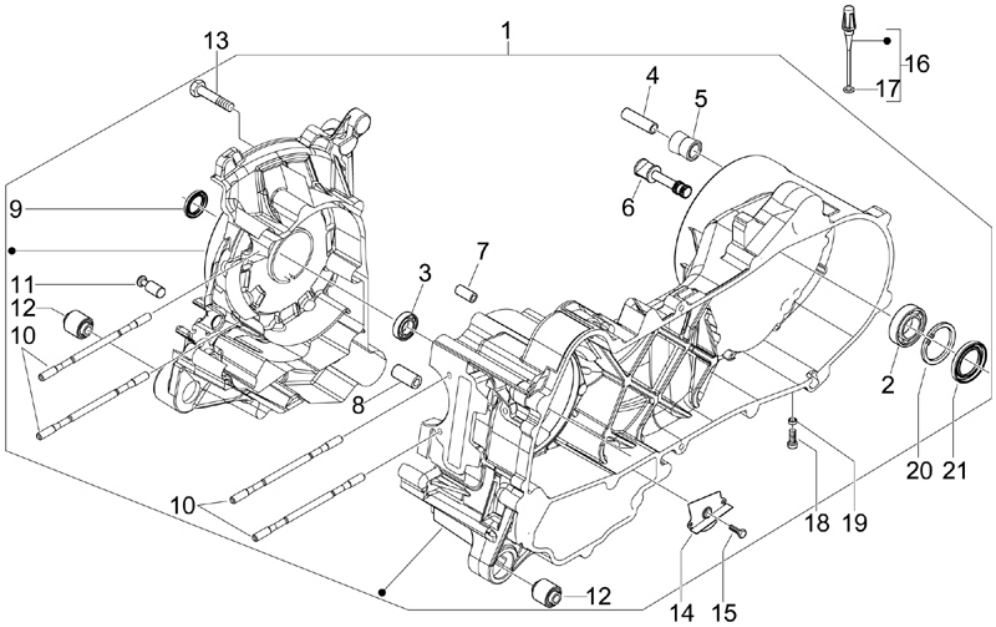


| Pos. | Code | Description | Qty | Variants |
|---|---|---|---|---|
| 1 | 8488565 | Carter w.p.i. | 1 | |
| 2 | 434735 | Bearing 20x47x14 | 1 | |
| 3 | 82671R | Bearing | 1 | |
| 4 | 266625 | Spacer | 1 | |
| 5 | 267823 | Shock absorber connection silent block | 1 | |
| 6 | 272921 | Shoe fulcrum pin | 1 | |
| 7 | 239388 | Pin 6,5x9,5x15 | 2 | |
| 8 | 431860 | Bush Ø8xØ12x8 | 1 | |
| 9 | 969028 | Gasket ring 17x28x07 | 1 | |
| 10 | 842161 | Stud bolt | 4 | |
| 11 | 483785 | Springs fixing pin | 1 | |
| 12 | 486081 | Silent-block | 2 | |
| 13 | 478895 | Screw w/ flange | 10 | |
| 14 | 969625 | Oil bulhead | 1 | |
| 15 | 484123 | Screw w/ flange | 2 | |
| 16 | 832130 | Complete oil level dipstick | 1 | |
| 17 | 827085 | Gasket ring 14,43x9,19x2,62 | 1 | |
| 18 | 269755 | Hex socket screw M8x12 | 1 | |
| 19 | 000397 | Gasket | 1 | |
| 20 | 006647 | Circlip | 1 | |
| 21 | 478498 | Gasket ring | 1 | |

| | |
|---|---|
| **Group** | Engine |
| **Code** | 01.06 |
| **Description** | Crankshaft |
| **Service** | 1 |

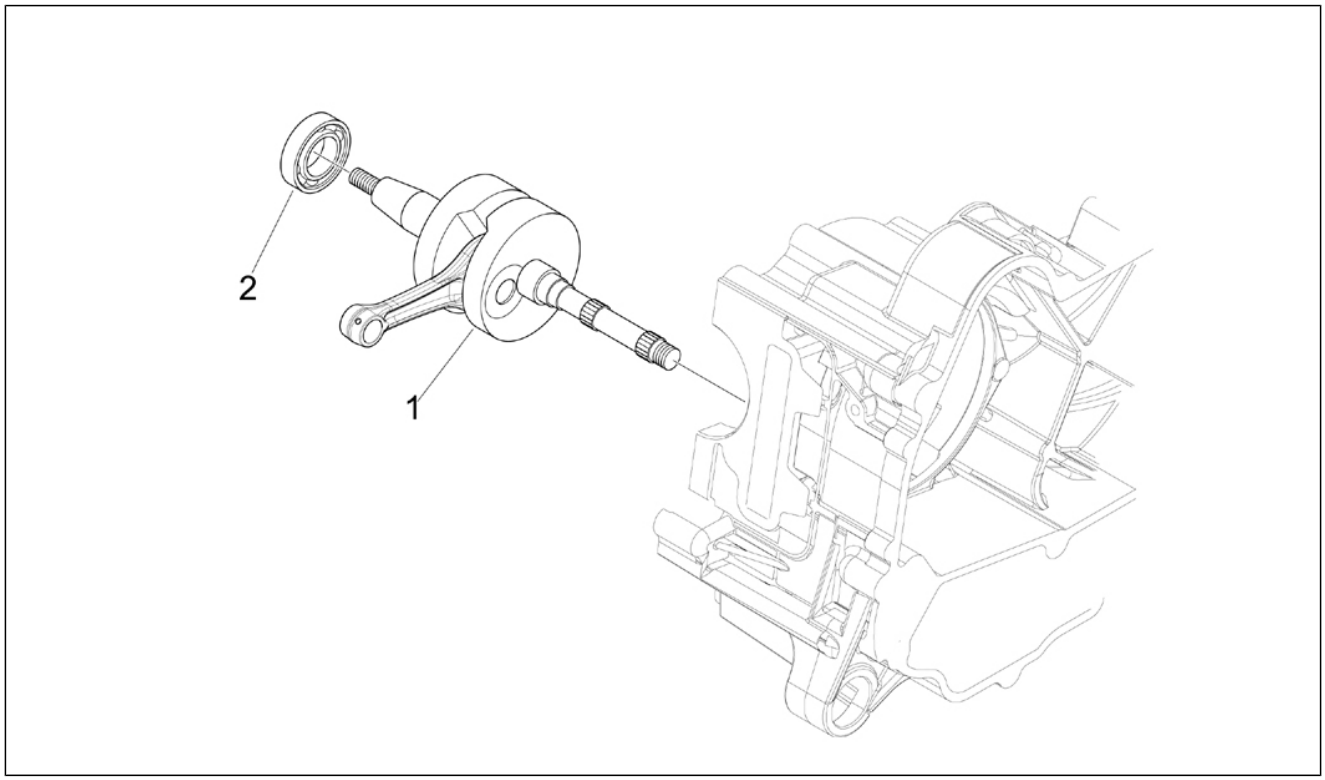


| Pos. | Code | Description | Qty | Variants |
|---|---|---|---|---|
| 1 | 969428 | Crankshaft cpl. | 1 | |
| 2 | 96925R | Bearing | 1 | |

| | |
|---|---|
| **Group** | Engine |
| **Code** | 01.07 |
| **Description** | Cylinder-piston-wrist pin unit |
| **Service** | 1 |

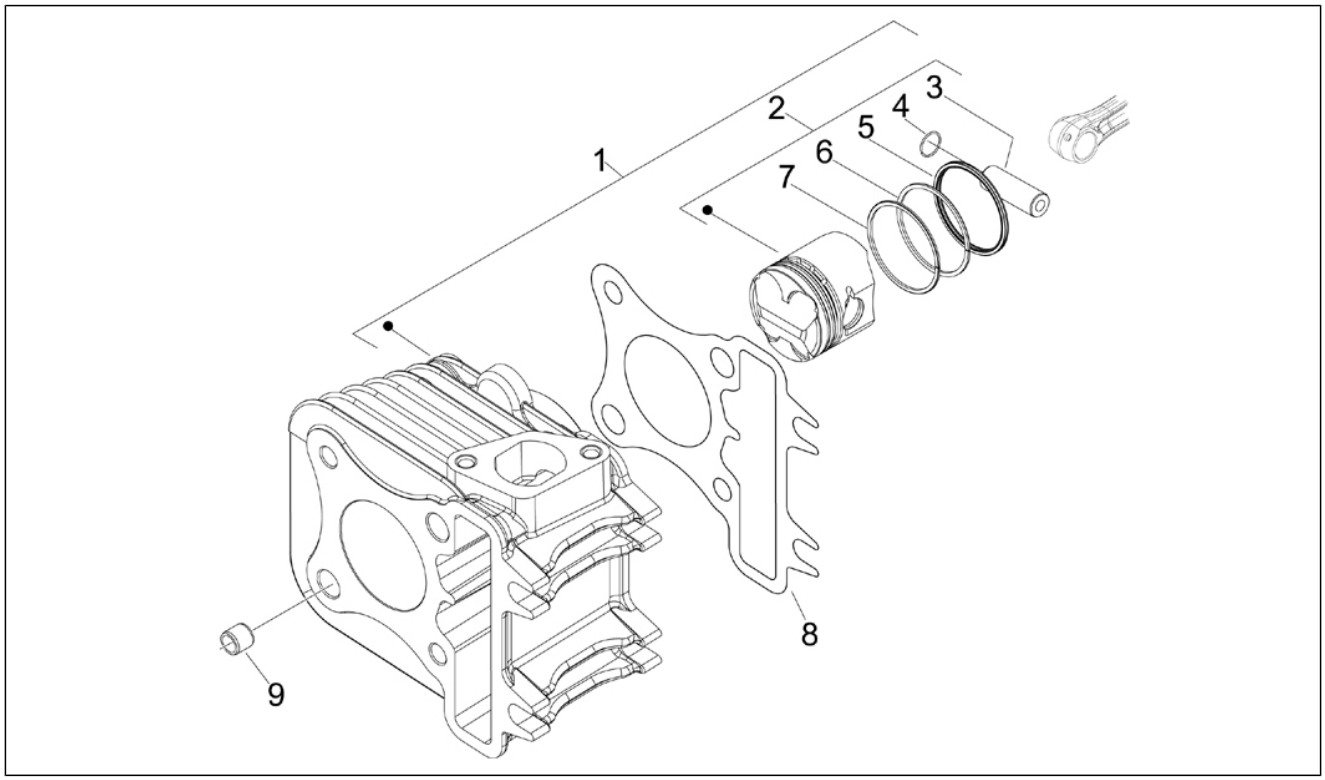


| Pos. | Code | Description | Qty | Variants |
|---|---|---|---|---|
| 1 | 873467 | Cylinder with piston | 1 | |
| 2 | 8734660004 | Piston assy Cat.4 | 1 | |
| 2 | 8734660003 | Piston assy Cat.3 | 1 | |
| 2 | 8734660002 | Piston assy Cat.2 | 1 | |
| 2 | 8734660001 | Piston assy Cat.1 | 1 | |
| 3 | 969214 | Piston pin | 1 | |
| 4 | 969213 | Pin retainer circlip | 2 | |
| 5 | 969217 | Oil scraper ring | 1 | |
| 6 | 969216 | Ring | 1 | |
| 7 | 969215 | Ring | 1 | |
| 8 | 969230 | Cylinder base gasket 0,5 | 1 | |
| 9 | 239388 | Pin 6,5x9,5x15 | 2 | |

| | |
|---|---|
| **Group** | Engine |
| **Code** | 01.10 |
| **Description** | Head unit - Valve |
| **Service** | 1 |

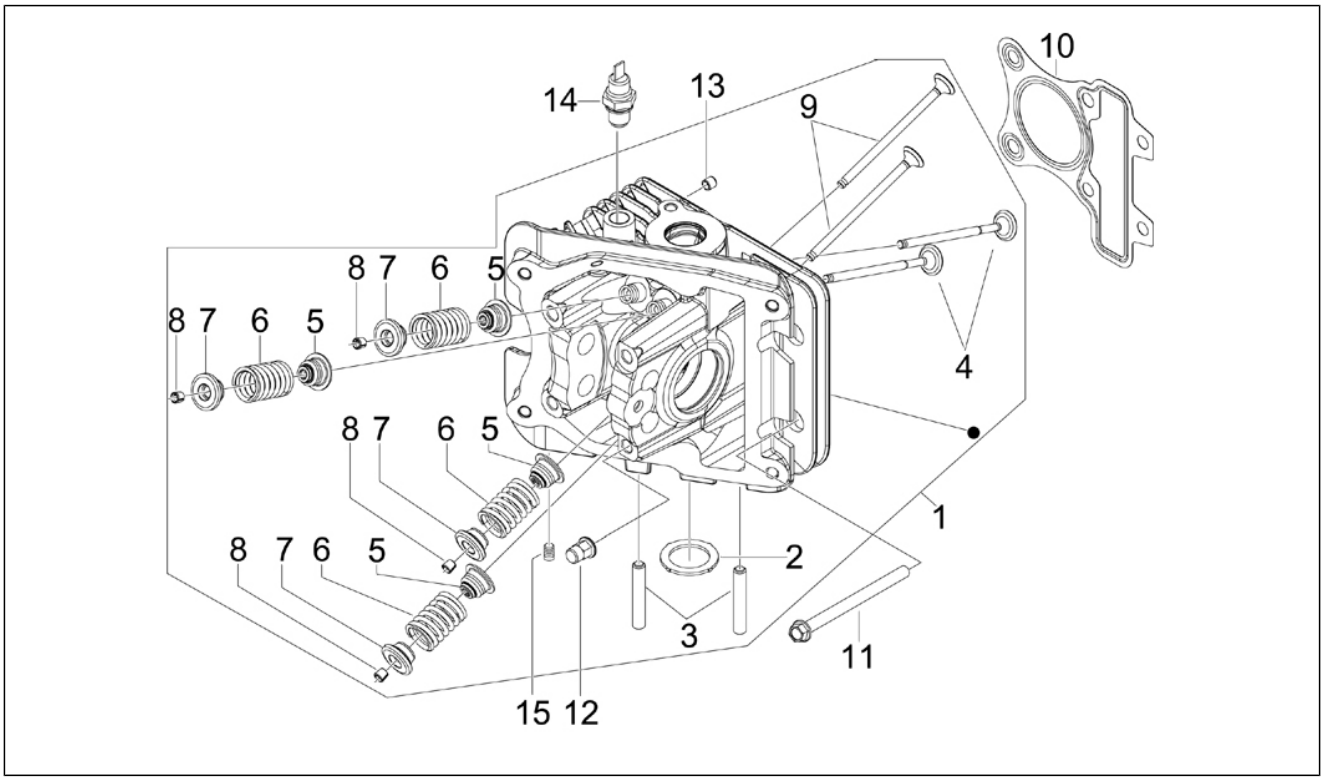


| Pos. | Code | Description | Qty | Variants |
|---|---|---|---|---|
| 1 | 845423 | Cylinder head assy. | 1 | |
| 2 | 845776 | Gasket | 1 | |
| 3 | 016060 | Stud bolt | 2 | |
| 4 | 872305 | Intake valve | 2 | |
| 5 | 843307 | Valve gasket ring | 4 | |
| 6 | 845951 | Spring | 4 | |
| 7 | 871889 | Upper cap | 4 | |
| 8 | 843338 | Valve half-cone | 8 | |
| 9 | 872272 | Exhaust valve | 2 | |
| 10 | 845663 | Cylinder head gasket 0,25 mm | 1 | |
| 10 | 846014 | Cylinder head gasket 0,35 mm | 1 | |
| 11 | 319242 | Hex socket screw | 2 | |
| 12 | 969224 | Nut | 4 | |
| 13 | 277916 | Locating dowel Ø7,5x12 | 2 | |
| 14 | 82622R | Thermistor | 1 | |
| 15 | 842360 | Plug M6x10 | 1 | |

| | |
|---|---|
| **Group** | Engine |
| **Code** | 01.11 |
| **Description** | Rocking levers support unit |
| **Service** | 1 |

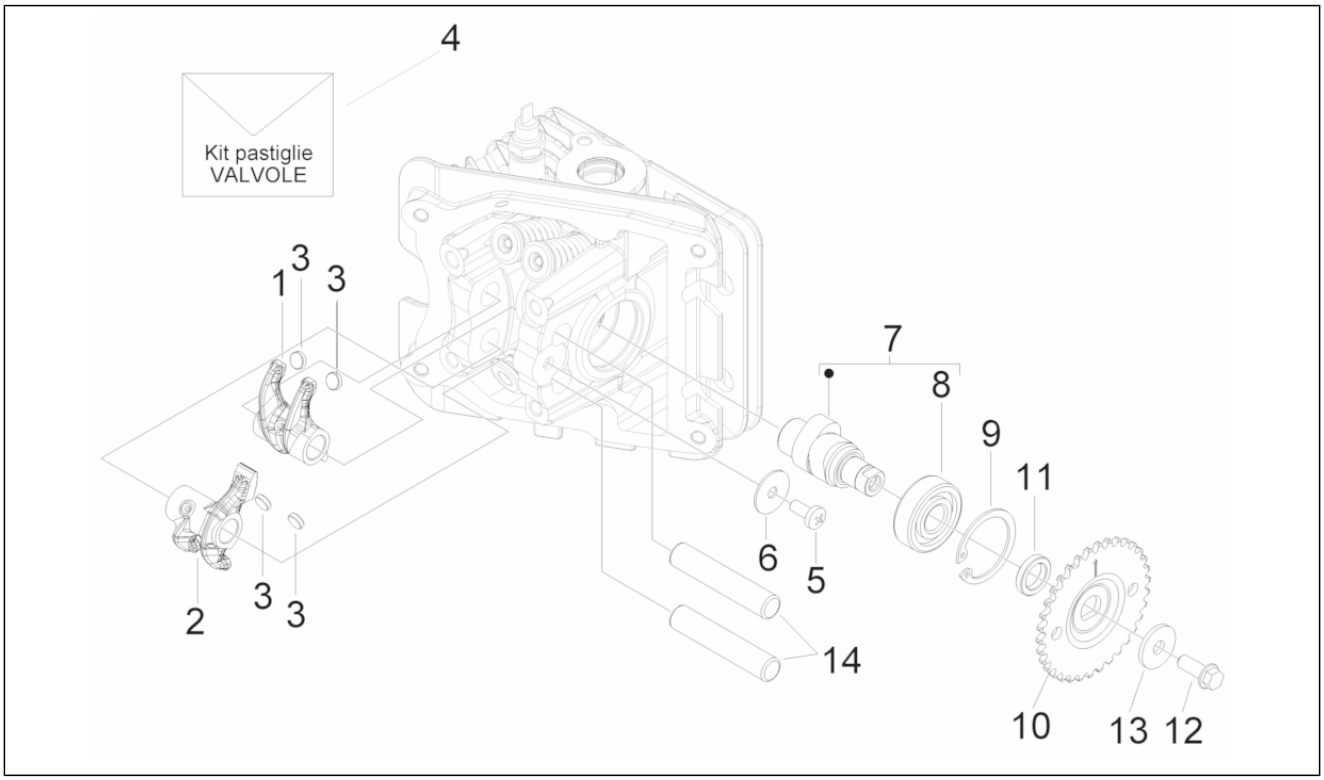


| Pos. | Code | Description | Qty | Variants |
|---|---|---|---|---|
| 1 | 842200 | Intake side rocker | 1 | |
| 2 | 842201 | Exhaust side rocker | 1 | |
| 3 | CM144331 | Calibrated tablet 3,10 | 4 | |
| 3 | CM144325 | Calibrated tablet 2,80 | 4 | |
| 3 | CM144332 | Calibrated tablet 3,15 | 4 | |
| 3 | CM144324 | Calibrated tablet 2,75 | 4 | |
| 3 | CM144328 | Calibrated tablet 2,95 | 4 | |
| 3 | CM144326 | Calibrated tablet 2,85 | 4 | |
| 3 | CM144322 | Calibrated tablet 2,65 | 4 | |
| 3 | CM144330 | Calibrated tablet 3,05 | 4 | |
| 3 | CM144320 | Calibrated tablet 2,55 | 4 | |
| 3 | CM144329 | Calibrated tablet 3,00 | 4 | |
| 3 | CM144333 | Calibrated tablet 3,2 | 4 | |
| 3 | CM144327 | Calibrated tablet 2,90 | 4 | |
| 3 | CM144319 | Calibrated tablet 2,50 | 4 | |
| 3 | CM144323 | Calibrated tablet 2,70 | 4 | |
| 3 | CM144321 | Calibrated tablet 2,60 | 4 | |
| 4 | 497616 | Valve calibrated brake pads kit | 1 | |
| 5 | 015585 | Self-tapping screw M5x12 | 2 | |
| 6 | 004021 | Washer | 1 | |
| 7 | 845426 | Camshaft | 1 | |
| 8 | 96926R | Bearing 12x32x10 | 1 | |
| 9 | 006632 | Snap ring | 1 | |
| 10 | 434943 | Timing system gear | 1 | |
| 11 | 842166 | Spacer | 1 | |
| 12 | B016777 | Screw w/ flange M6x16 | 1 | |
| 13 | 436695 | Belleville spring Ø6,4xØ20x2 | 1 | |
| 14 | 842174 | Rocker arms axis | 2 | |

| | |
|---|---|
| **Group** | Engine |
| **Code** | 01.12 |
| **Description** | Cylinder head cover |
| **Service** | 1 |

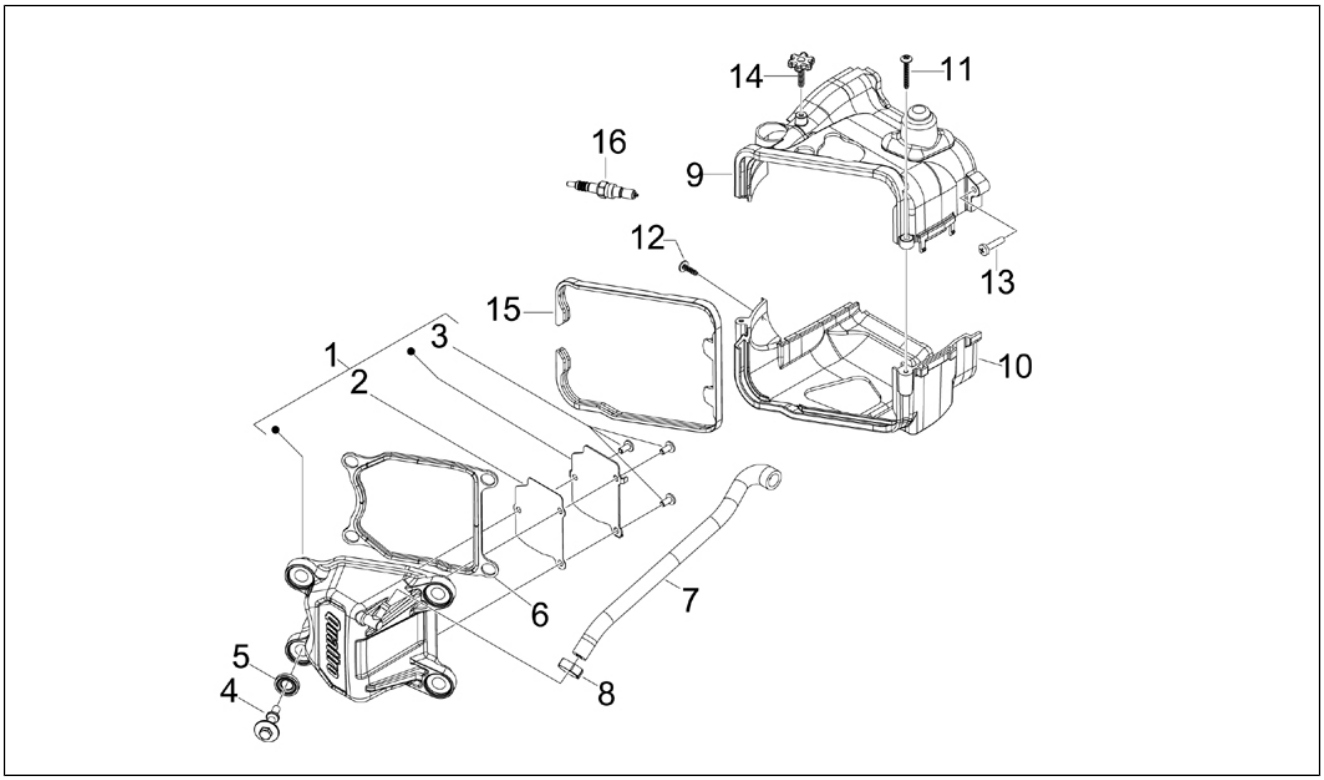


| Pos. | Code | Description | Qty | Variants |
|---|---|---|---|---|
| 1 | 848990 | Head cover cpl. | 1 | |
| 2 | 849012 | Gasket | 1 | |
| 3 | 430264 | Self-tapping screw | 3 | |
| 4 | 872635 | Special screw | 4 | |
| 5 | 830249 | Damper drift | 4 | |
| 6 | 845339 | Gasket | 1 | |
| 7 | 848993 | Breather pipe | 1 | |
| 8 | CM001904 | Hose clamp | 1 | |
| 9 | 846992 | Cooler cap | 1 | |
| 10 | 846993 | Cooler cap | 1 | |
| 11 | 259577 | screw | 2 | |
| 12 | 270793 | TBCIC Screw | 1 | |
| 13 | 828662 | Screw M5x22 | 1 | |
| 14 | 969339 | Screw with Knob | 1 | |
| 15 | 846991 | Gasket | 1 | |
| 16 | 641387 | Spark plug | 1 | |

| | |
|---|---|
| **Group** | Engine |
| **Code** | 01.13 |
| **Description** | Driving pulley |
| **Service** | 1 |

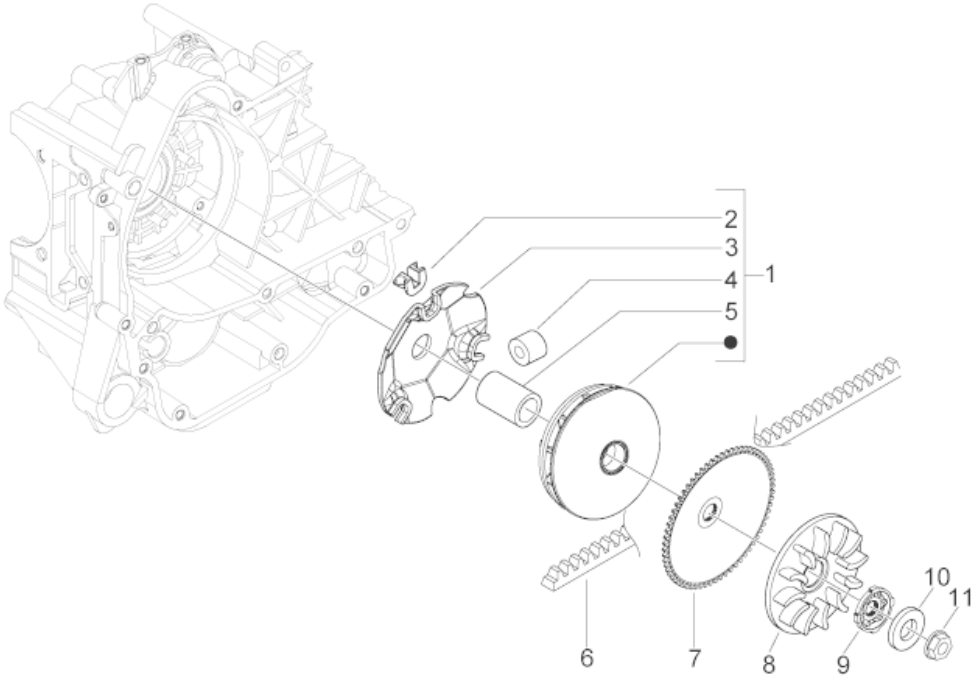


| Pos. | Code | Description | Qty | Variants |
|---|---|---|---|---|
| 1 | CM110304 | Half-pulley assy., driving | 1 | |
| 2 | 289931 | Sliding block | 3 | |
| 3 | 480227 | Roller contrast | 1 | |
| 4 | CM1102035 | Rollers kit | 1 | |
| 5 | 480230 | Spacer | 1 | |
| 6 | 82645R | V-belt | 1 | |
| 7 | 479561 | Fixed driving half pulley | 1 | |
| 8 | 845611 | Fan | 1 | |
| 9 | 877075 | Teethed bush | 1 | |
| 10 | 265300 | Washer | 1 | |
| 11 | 289519 | Flanged nut M10x1,25 | 2 | |

| | |
|---|---|
| **Group** | Engine |
| **Code** | 01.14 |
| **Description** | Driven pulley |
| **Service** | 1 |

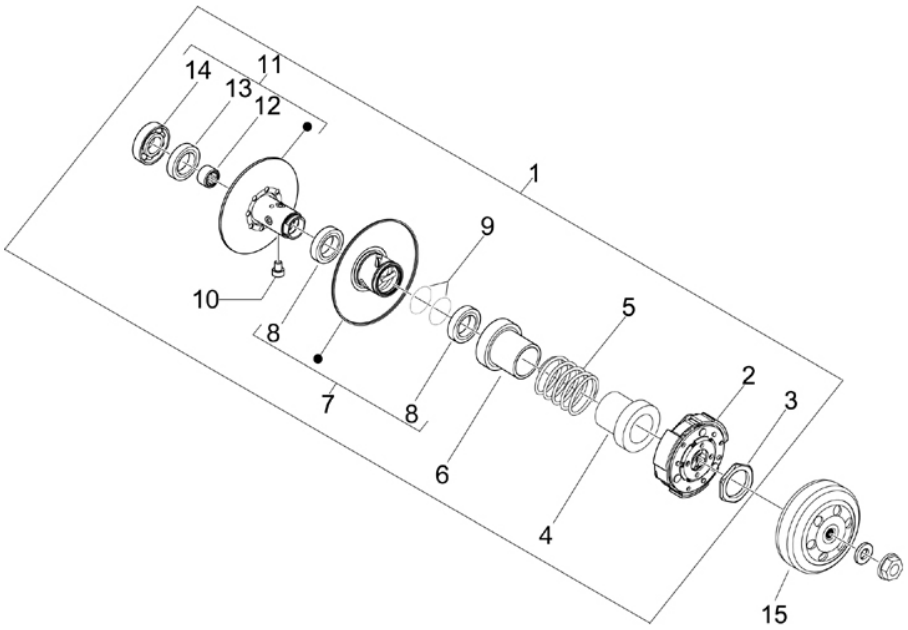


| Pos. | Code | Description | Qty | Variants |
|---|---|---|---|---|
| 1 | CM100107 | Complete secondary pulley | 1 | |
| 2 | CM1002025 | Centrifugal clutch assembly | 1 | |
| 3 | 289955 | Ring nut | 1 | |
| 4 | 487935 | Clutch side cap | 1 | |
| 5 | 478028 | Variator spring | 1 | |
| 6 | 483443 | Pulley side cap | 1 | |
| 7 | 827893 | Complete movable secondary pulley | 1 | |
| 8 | 289950 | Gasket ring | 2 | |
| 9 | 289840 | Gasket | 2 | |
| 10 | 482766 | Pin | 3 | |
| 11 | 4795526 | Complete fixed secondary pulley | 1 | |
| 12 | 289952 | Roller cage | 1 | |
| 13 | 006624 | Ring | 1 | |
| 14 | 82655R | Ball bearing | 1 | |
| 15 | 289933 | Clutch drum | 1 | |

| | |
|---|---|
| **Group** | Engine |
| **Code** | 01.15 |
| **Description** | Crankcase cover - Crankcase cooling |
| **Service** | 1 |

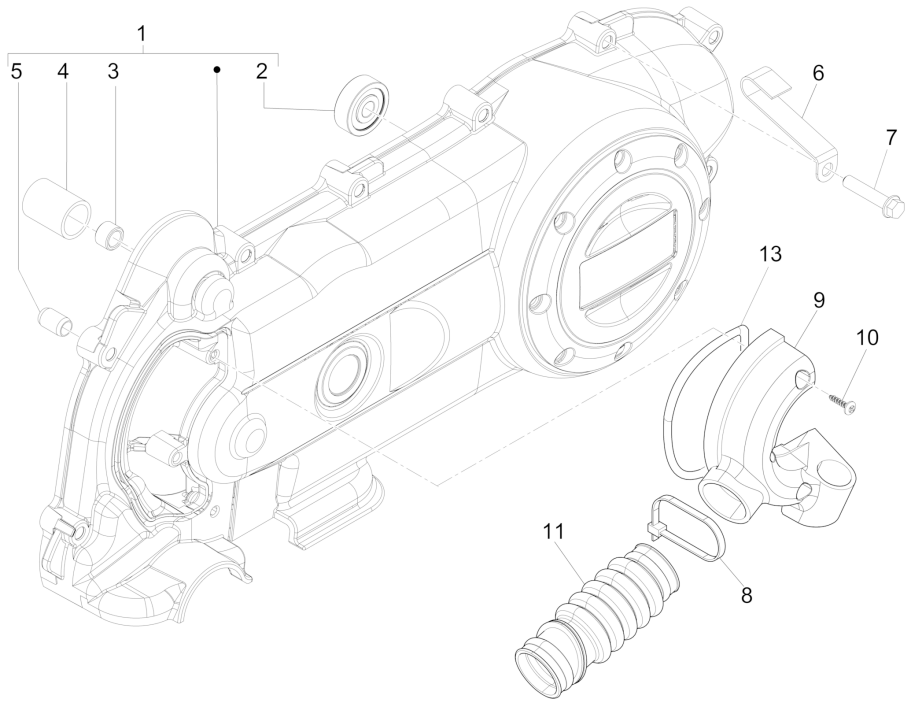


| Pos. | Code | Description | Qty | Variants |
|---|---|---|---|---|
| 1 | 8733655 | Transmission cover with U.P. | 2 | |
| 2 | 82521R | Bearing | 2 | |
| 3 | 431860 | Bush Ø8xØ12x8 | 1 | |
| 4 | 286209 | Bush | 2 | |
| 5 | 239388 | Pin 6,5x9,5x15 | 2 | |
| 6 | 482291 | Hose clamp | 2 | |
| 7 | B016792 | Screw w/ flange M6x30 | 11 | |
| 8 | 709519 | Hose clamp | 1 | |
| 9 | 969804 | Cooling Cover | 1 | |
| 10 | 435295 | screw | 3 | |
| 11 | 298548 | Bellows | 1 | |
| 13 | 435251 | Gasket | 1 | |

| | |
|---|---|
| **Group** | Engine |
| **Code** | 01.18 |
| **Description** | Oil pump |
| **Service** | 1 |

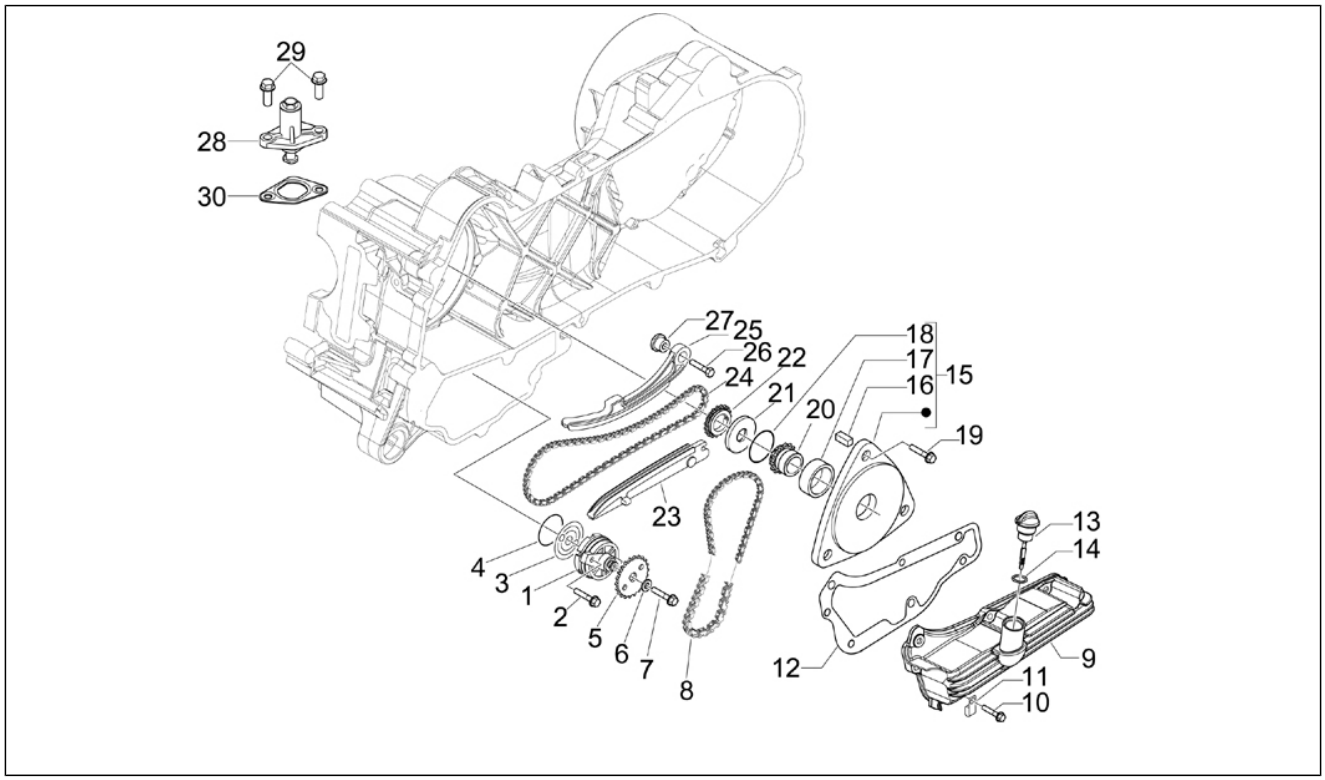


| Pos. | Code | Description | Qty | Variants |
|---|---|---|---|---|
| 1 | 877262 | Oil pump assy. | 1 | |
| 2 | 433477 | Screw w/ flange | 2 | |
| 3 | 436751 | Carter-oil pump gasket | 1 | |
| 4 | 434947 | O-ring 12,42x1 | 1 | |
| 5 | 287913 | Oil pump gear | 1 | |
| 6 | 436695 | Belleville spring Ø6,4xØ20x2 | 1 | |
| 7 | B016426 | Screw w/ flange M6x14 | 1 | |
| 8 | 434447 | Oil pump chain | 1 | |
| 9 | 844871 | Motor oil cup | 1 | |
| 10 | 414837 | Screw w/ flange M6x25 | 6 | |
| 11 | 487824 | Retainer clamp | 1 | |
| 12 | 969132 | Sump gasket | 1 | |
| 13 | 844721 | Oil level rod cpl. | 1 | |
| 14 | 479986 | O-ring | 1 | |
| 15 | 4783245 | Cover | 1 | |
| 16 | 434345 | Oil pump chain drift | 1 | |
| 17 | 2879633 | Gasket ring | 1 | |
| 18 | 844888 | Gasket ring | 1 | |
| 19 | 484123 | Screw w/ flange | 3 | |
| 20 | 833495 | Oil pump control pinion | 1 | |
| 21 | 430535 | Washer | 1 | |
| 22 | 969747 | Timing system chain pinion cpl | 1 | |
| 23 | 969877 | Sliding block | 1 | |
| 24 | 96933R | Camshaft chain | 1 | |
| 25 | 828561 | Chain tensioner rod | 1 | |
| 26 | 031089 | Hex screw M6x18 | 1 | |
| 27 | 478247 | Spacer | 1 | |
| 28 | 82650R | Complete chain tensioner | 1 | |

| | |
|---|---|
| **Group** | Engine |
| **Code** | 01.18 |
| **Description** | Oil pump |
| **Service** | 1 |

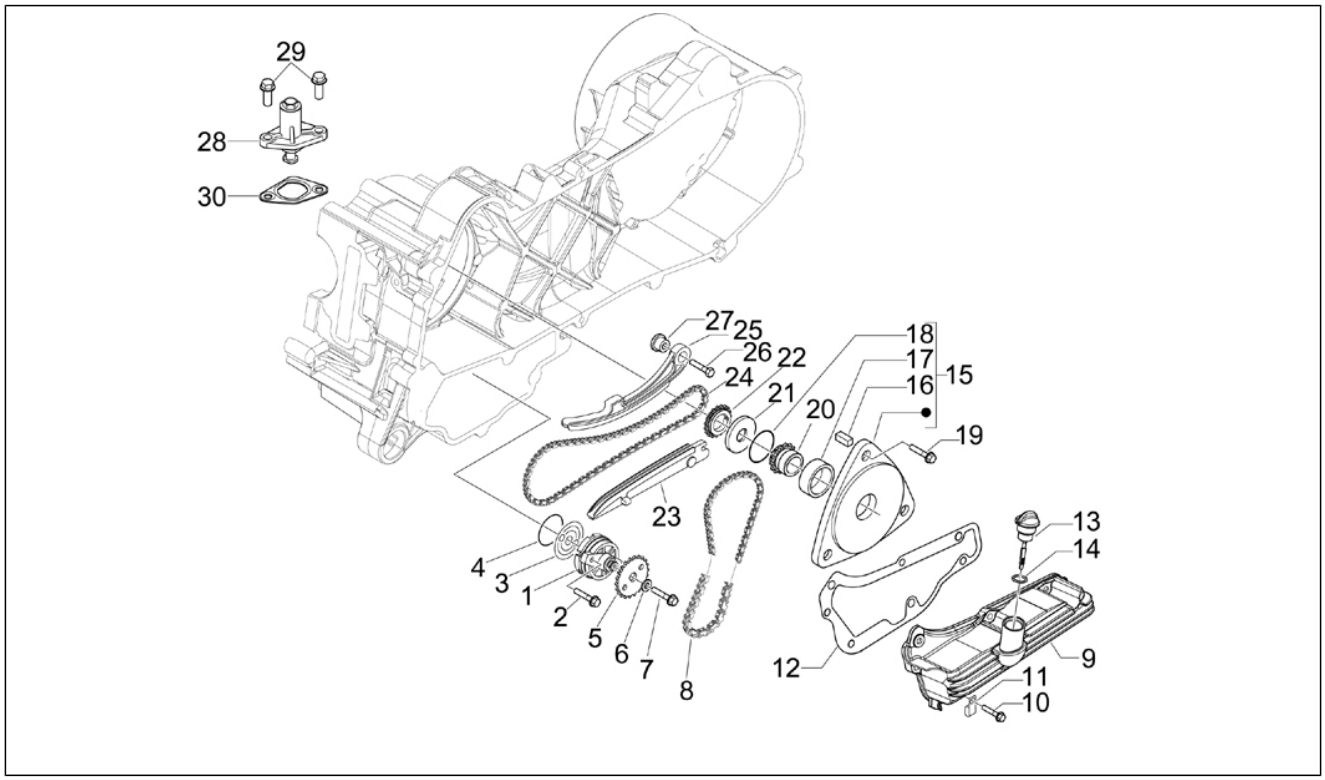


| Pos. | Code | Description | Qty | Variants |
|---|---|---|---|---|
| 29 | B016426 | Screw w/ flange M6x14 | 2 | |
| 30 | 847928 | Cylinder/chain tensioner gasket | 1 | |

| | |
|---|---|
| **Group** | Engine |
| **Code** | 01.20 |
| **Description** | Stater - Electric starter |
| **Service** | 1 |

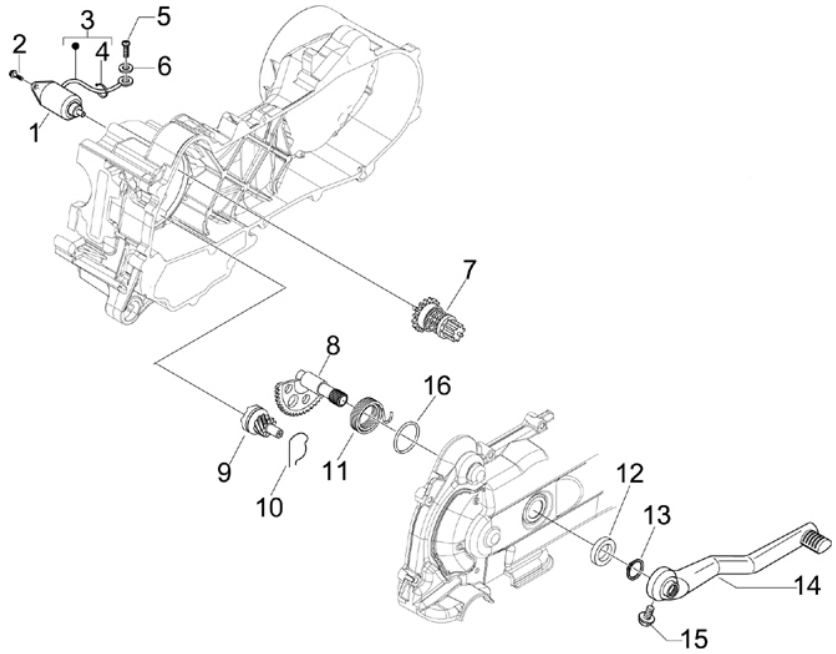


| Pos. | Code | Description | Qty | Variants |
|---|---|---|---|---|
| 1 | 96921R | Starter motor | 1 | |
| 2 | 018639 | Hex screw M6x20 | 2 | |
| 3 | 969347 | Wire | 1 | |
| 4 | 145298 | Lock-strap L=180mm | 1 | |
| 5 | 018644 | screw | 1 | |
| 6 | 016404 | Flat washer 4,2x7,6x0,9 | 1 | |
| 7 | 289202 | Complete gear unit | 1 | |
| 8 | 831458 | Starting shaft | 1 | |
| 9 | 483537 | Pinion starter | 1 | |
| 10 | 830212 | Elastic spring | 1 | |
| 11 | 289495 | Starter lever return spring | 1 | |
| 12 | 433987 | Washer 16,3x23,8 | 1 | |
| 13 | 006416 | Circlip | 1 | |
| 14 | 969421 | Starter lever | 1 | |
| 15 | 414837 | Screw w/ flange M6x25 | 1 | |
| 16 | 435251 | Gasket | 1 | |

| | |
|---|---|
| **Group** | Engine |
| **Code** | 01.21 |
| **Description** | Flywheel magneto |
| **Service** | 1 |

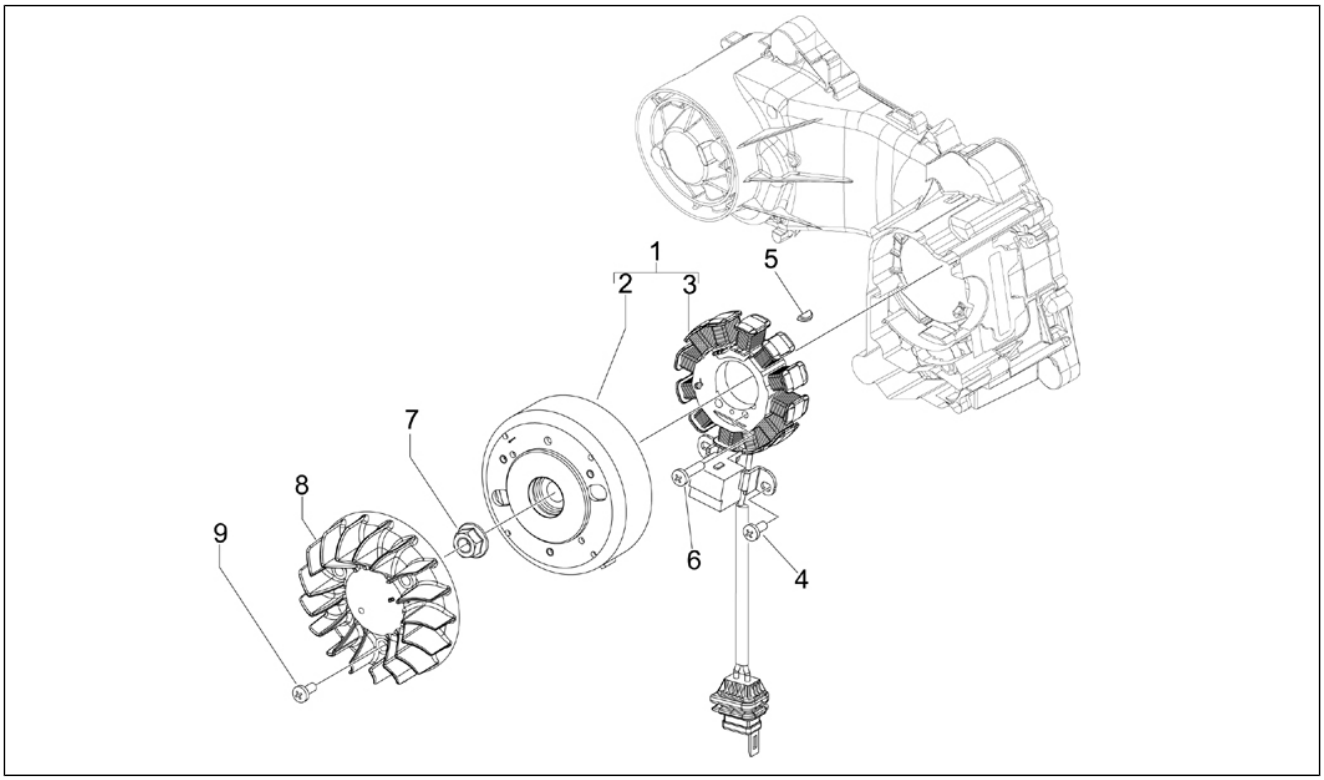


| Pos. | Code | Description | Qty | Variants |
|---|---|---|---|---|
| 1 | 82798R | Cdi magneto assy | 1 | |
| 2 | 638953 | Rotor | 1 | |
| 3 | 833632 | Stator | 1 | |
| 4 | 873979 | Screw M5x14 | 2 | |
| 5 | 000267 | Transmission key | 1 | |
| 6 | 015856 | screw M5x21 | 2 | |
| 7 | 289005 | Flanged nut | 1 | |
| 8 | 830286 | Fan | 1 | |
| 9 | 484123 | Screw w/ flange | 3 | |

| | |
|---|---|
| **Group** | Engine |
| **Code** | 01.23 |
| **Description** | Flywheel magneto cover - Oil filter |
| **Service** | 1 |

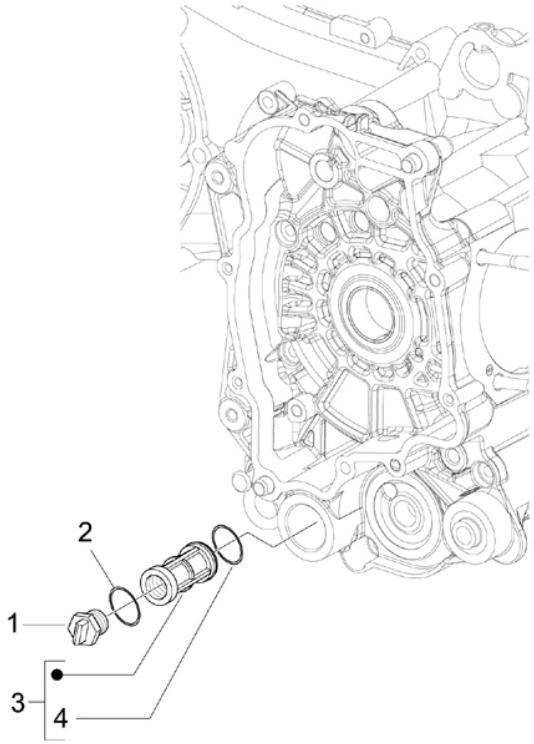


| Pos. | Code | Description | Qty | Variants |
|---|---|---|---|---|
| 1 | 288548 | Oil filter plug | 1 | |
| 2 | 285536 | O-ring 31,47x1,78 | 1 | |
| 3 | 431242 | Oil filter | 1 | |
| 4 | 288474 | O-ring 20,35x1,78 | 1 | |

| | |
|---|---|
| **Group** | Engine |
| **Code** | 01.25 |
| **Description** | Reduction unit |
| **Service** | 1 |

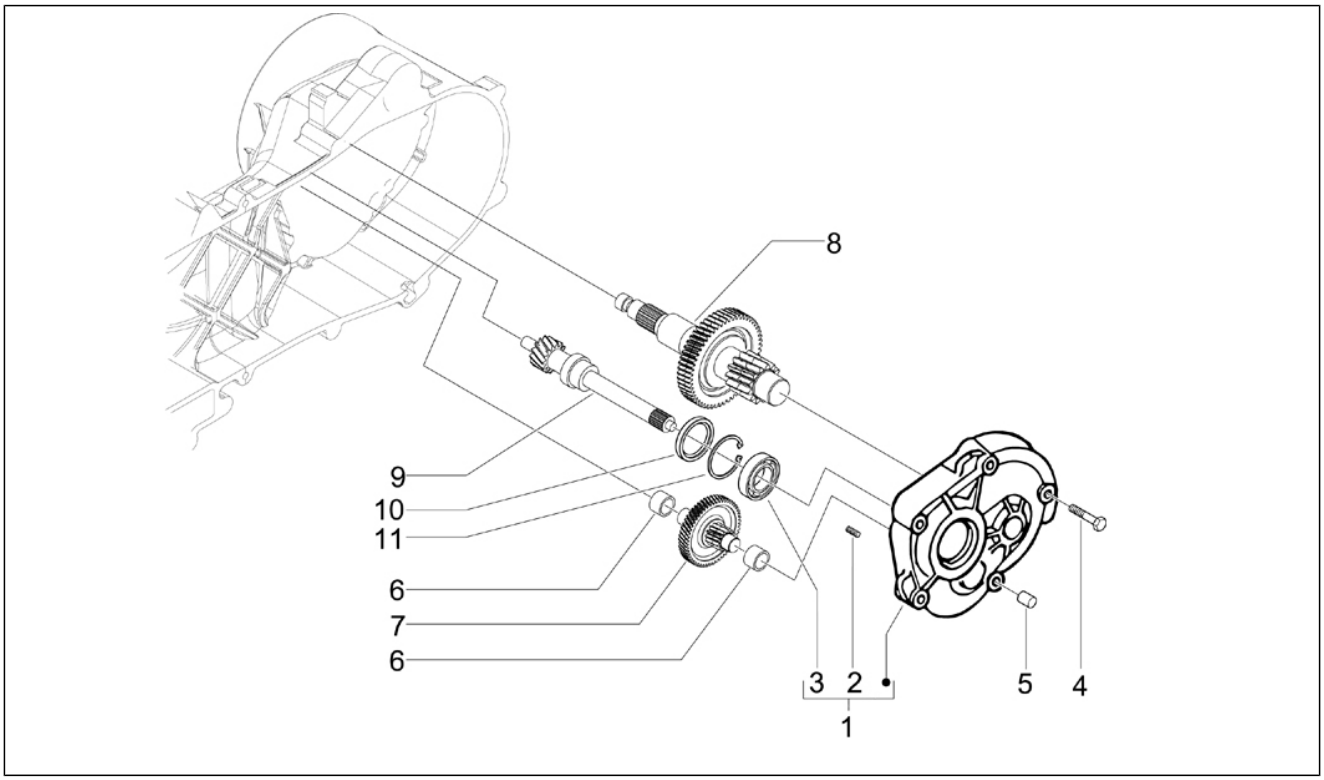


| Pos. | Code | Description | Qty | Variants |
|---|---|---|---|---|
| 1 | 4874805 | Wheel hub cover with U.P. | 1 | |
| 2 | 239388 | Pin 6,5x9,5x15 | 2 | |
| 3 | 435363 | Bearing | 1 | |
| 4 | B016763 | Screw w/ flange M6x40 | 5 | |
| 5 | 478197 | Compensator ring | 1 | |
| 6 | 288639 | Shim washer | 2 | |
| 7 | 8262165 | Countershaft with u.p. | 1 | |
| 8 | 8252515 | Rear wheel axle with U.P. | 1 | |
| 9 | 4795935 | Driven pulley shaft | 1 | |
| 10 | 480066 | Gasket ring | 1 | |
| 11 | 480953 | Snap ring | 1 | |

| | |
|---|---|
| **Group** | Engine |
| **Code** | 01.35 |
| **Description** | Rear brake - Brake jaw |
| **Service** | 1 |

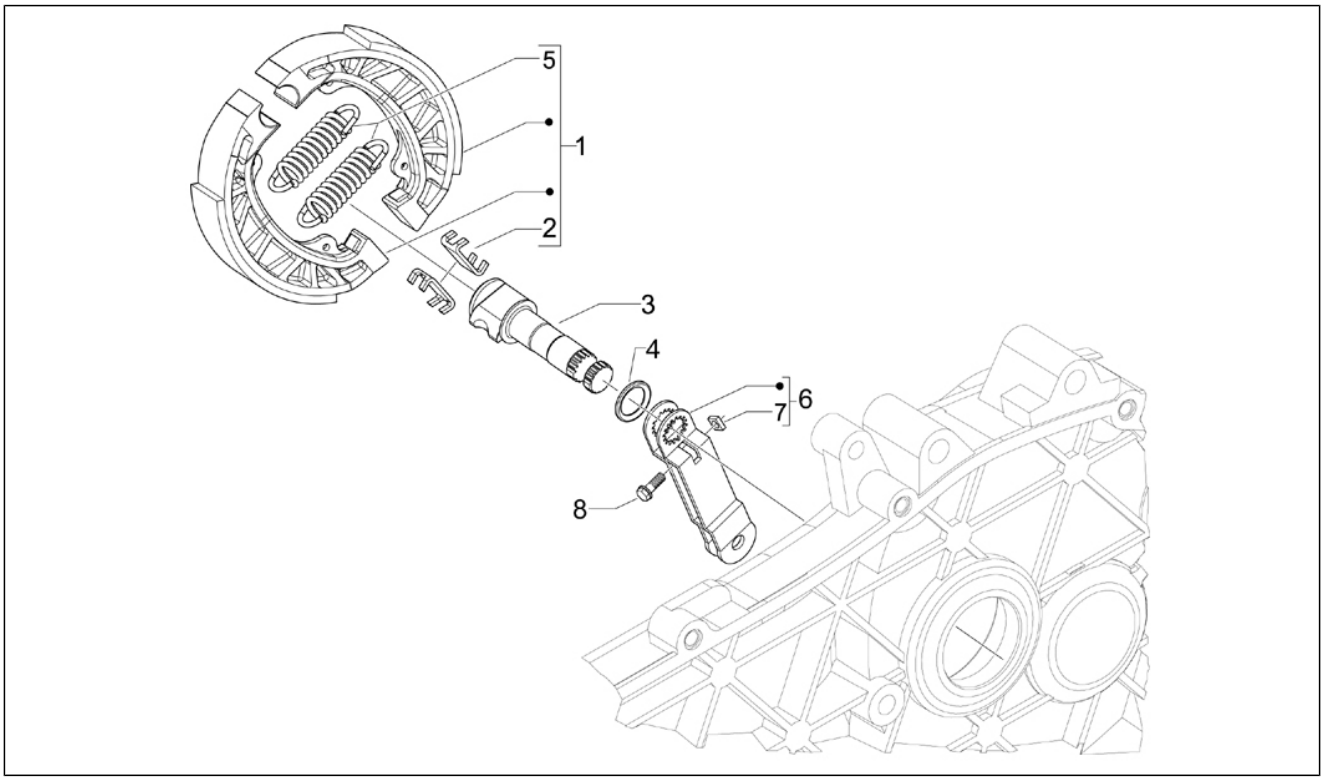


| Pos. | Code | Description | Qty | Variants |
|---|---|---|---|---|
| 1 | 82907R | Pair of brake shoes | 1 | |
| 2 | 266724 | Plate | 1 | |
| 3 | 274245 | Brake lever shaft | 1 | |
| 4 | 273419 | Gasket ring | 1 | |
| 5 | 647384 | Brake shoes return spring | 2 | |
| 6 | 833788 | Rear brake lever | 1 | |
| 7 | 828862 | Square nut | 1 | |
| 8 | B017633 | Hex socket screw | 1 | |
| 8 | 828863 | Screw w/ flange | 1 | |

| | |
|---|---|
| **Group** | Engine |
| **Code** | 01.39 |
| **Description** | Carburettor, assembly - Union pipe |
| **Service** | 1 |

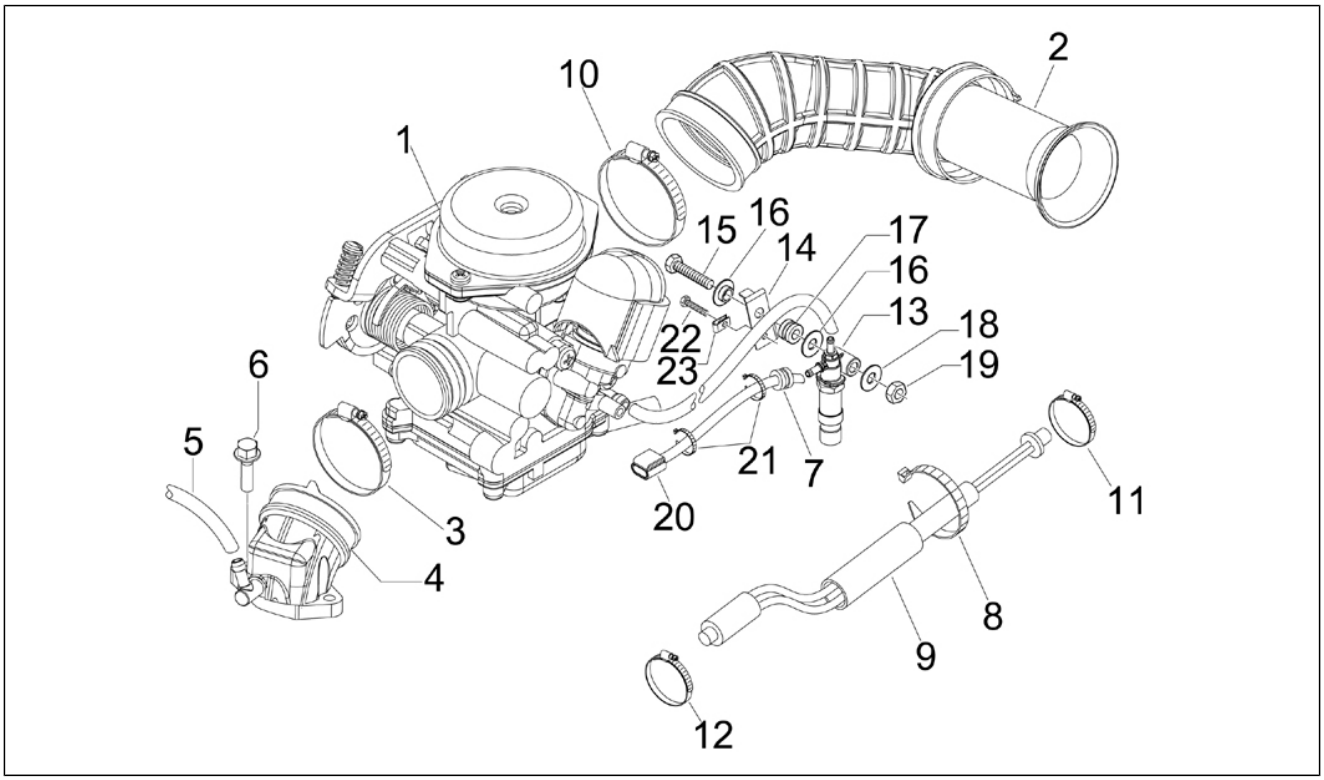


| Pos. | Code | Description | Qty | Variants |
|---|---|---|---|---|
| 1 | CM158005 | Carburettor keihin NCV20 AR8 | 1 | |
| 2 | 848680 | Air cleaner sleeve | 1 | |
| 3 | 709532 | Hose clamp | 1 | |
| 4 | 845737 | Union | 1 | |
| 5 | CM027909 | pipe I.700 | 1 | |
| 6 | 018639 | Hex screw M6x20 | 2 | |
| 7 | 573052 | Fairlead | 1 | |
| 8 | 257134 | Lock-strap L=277 | 1 | |
| 9 | 82961R | Resistor Module | 1 | |
| 10 | 709532 | Hose clamp | 1 | |
| 11 | CM002904 | Hose clamp | 1 | |
| 12 | CM002901 | Hose clamp | 1 | |
| 13 | 873270 | Solenoid | 1 | |
| 14 | 641290 | Bracket | 1 | |
| 15 | 830061 | Screw w/ flange M5x16 | 1 | |
| 16 | 843213 | T bush | 2 | |
| 17 | 487665 | Fairlead | 1 | |
| 18 | 006078 | Plain washer 12x5.2x1 | 1 | |
| 19 | 012112 | Nut | 1 | |
| 20 | 639632 | Instrument support | 1 | |
| 21 | 145298 | Lock-strap L=180mm | 2 | |
| 22 | 030039 | Hex screw | 1 | |
| 23 | 248419 | Spring plate M5 | 1 | |

| | |
|---|---|
| **Group** | Engine |
| **Code** | 01.40 |
| **Description** | Carburetor's components |
| **Service** | 1 |

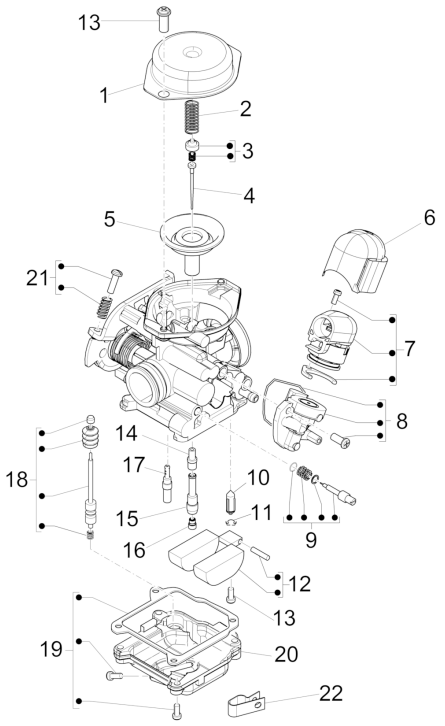


| Pos. | Code | Description | Qty | Variants |
|---|---|---|---|---|
| 1 | 876821 | Gas valve cover | 1 | |
| 2 | 876819 | Gas valve spring | 1 | |
| 3 | 876820 | Cup | 1 | |
| 4 | CM140212 | Conical pin | 1 | |
| 5 | CM160802 | Diaphragm | 1 | |
| 6 | 828844 | Cap | 1 | |
| 7 | CM142914 | Starter | 1 | |
| 8 | 876826 | Starter device | 1 | |
| 9 | CM160102 | Adj.min.eng.speed screw cpl. | 1 | |
| 10 | CM147102 | Fuel closing needle | 1 | |
| 11 | 841622 | Spring | 1 | |
| 12 | 876822 | Float | 1 | |
| 13 | 841623 | Special screw | 3 | |
| 14 | 828825 | Diffuser | 1 | |
| 15 | CM160201 | Pipe | 1 | |
| 16 | CM142101 | Main jet 72 | 1 | |
| 17 | CM142302 | Idle jet | 1 | |
| 18 | 876823 | Acceleration pump kit | 1 | |
| 19 | 876824 | Float chamber kit | 1 | |
| 20 | CM160301 | Float chamber | 1 | |
| 21 | CM162903 | Adjuster screw | 1 | |
| 22 | 847778 | Hose clamp | 1 | |

| | |
|---|---|
| **Group** | Engine |
| **Code** | 01.42 |
| **Description** | Silencer |
| **Service** | 1 |

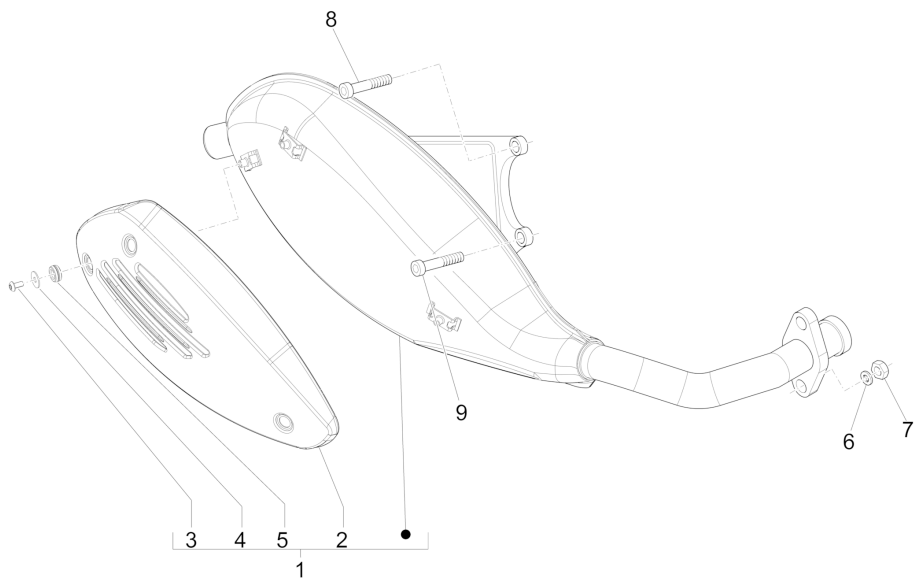


| Pos. | Code | Description | Qty | Variants |
|---|---|---|---|---|
| 1 | 8804035 | Silencer complete with protection | 1 | |
| 2 | 845465 | Protection | 1 | |
| 3 | 842908 | screw M5x10 | 3 | |
| 4 | 841821 | Washer 6,6x18x1,6 | 3 | |
| 5 | 841782 | Rubber spacer | 3 | |
| 6 | 834187 | Spring washer 16x8,2x2,2 | 2 | |
| 7 | 833494 | Special nut | 2 | |
| 8 | 00H02500272 | screw 8M125X90 | 1 | |
| 9 | 844470 | screw | 1 | |

| | |
|---|---|
| **Group** | Engine |
| **Code** | 01.45 |
| **Description** | Air filter |
| **Service** | 1 |

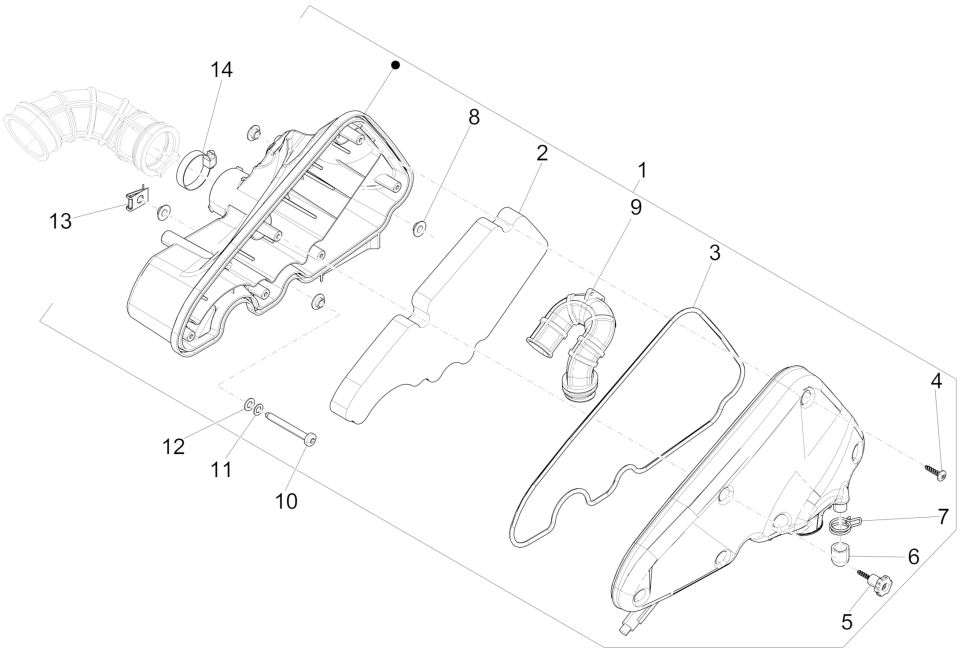


| Pos. | Code | Description | Qty | Variants |
|---|---|---|---|---|
| 1 | 878184 | Complete air cleaner box | 1 | |
| 2 | 843194 | Air filter | 1 | |
| 3 | 843195 | Gasket | 1 | |
| 4 | 258146 | Self-tap screw M3x20 | 5 | |
| 5 | 479132 | Air filter closing knob | 1 | |
| 6 | 827831 | Cap | 1 | |
| 7 | CM002910 | Hose clamp | 1 | |
| 8 | 830056 | Knurled bushing | 4 | |
| 9 | 843849 | Air calibration tube | 1 | |
| 10 | 018640 | Special cap screw M6x50 | 2 | |
| 11 | 012533 | Notched washer 6,6x11x0 | 2 | |
| 12 | 003056 | Flat washer 6,4x12x1 | 2 | |
| 13 | 254485 | Spring plate M6 | 2 | |
| 14 | 709532 | Hose clamp | 1 | |

| | |
|---|---|
| **Group** | Engine |
| **Code** | 01.46 |
| **Description** | Secondary air box |
| **Service** | 1 |

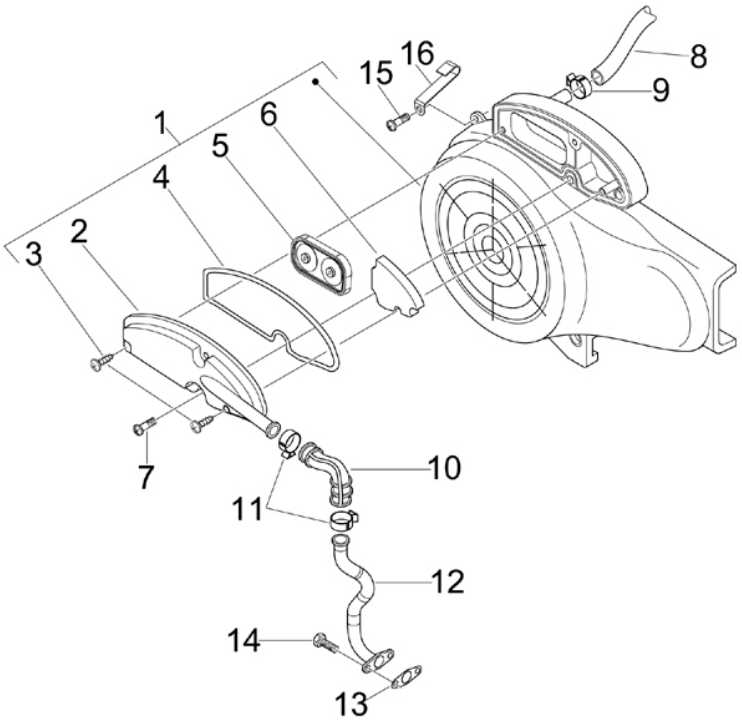


| Pos. | Code | Description | Qty | Variants |
|---|---|---|---|---|
| 1 | 843567 | Flywheel cover sas | 1 | |
| 2 | 832971 | Cover sas | 1 | |
| 3 | 478533 | Self-tap screw | 3 | |
| 4 | 832973 | Gasket | 1 | |
| 5 | 82758R | Diaphragm | 1 | |
| 6 | 832972 | Filter sas | 1 | |
| 7 | 259151 | screw M5x16 | 3 | |
| 8 | 843525 | Intake pipe sas | 1 | |
| 9 | CM001903 | Hose clamp | 1 | |
| 10 | 833472 | Hose sas | 1 | |
| 11 | CM001905 | Hose clamp | 2 | |
| 12 | 876483 | Intake pipe sas | 1 | |
| 13 | 832059 | Gasket | 1 | |
| 14 | B016426 | Screw w/ flange M6x14 | 2 | |
| 15 | 015856 | screw M5x21 | 1 | |
| 16 | D9004461432 | Hose clamp | 1 | |

| | |
|---|---|
| **Group** | Frame - Plastic parts - Coachwork |
| **Code** | 02.01 |
| **Description** | Frame/bodywork |
| **Service** | 1 |

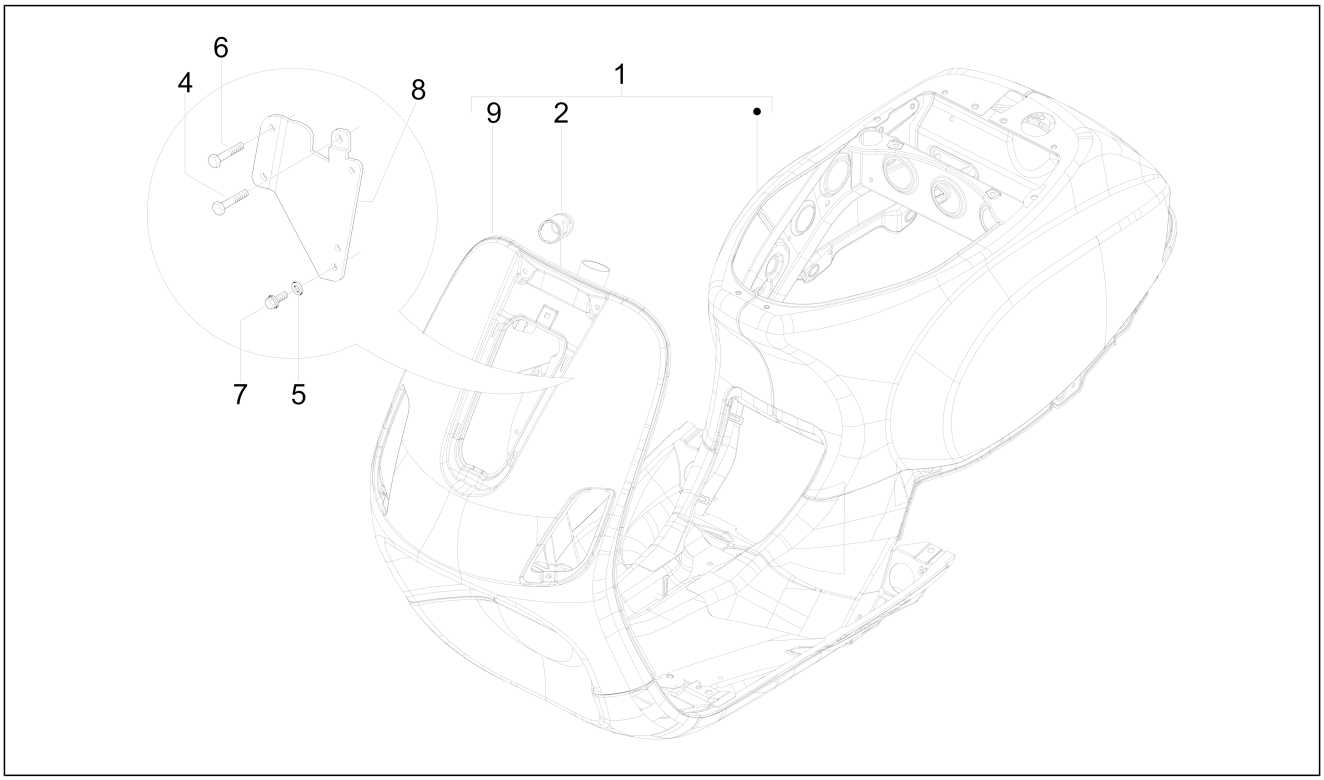


| Pos. | Code | Description | Qty | Variants |
|---|---|---|---|---|
| 1 | 67495050R7 | Complete body | 1 | **Colour:**DRAGON RED[894]<br>**Colour:**DRAGON RED[894]<br>**Colour:**DRAGON RED[894]<br>**Colour:**DRAGON RED[894] |
| 1 | 67495050BR | Complete body | 1 | **Colour:**White/Blue College[544 - 231/A]<br>**Colour:**White[544]<br>**Colour:**White[544]<br>**Colour:**White/Red College[544 - 894]<br>**Colour:**White/Red College[544 - 894]<br>**Colour:**White[544]<br>**Colour:**White[544] |
| 1 | 67495050NL | Complete body | 1 | **Colour:**Semi glossy black[85/B]<br>**Colour:**Semi glossy black[85/B] |
| 1 | 67495050DI | Complete body | 1 | **Colour:**Pastel blue[244/A]<br>**Colour:**Pastel blue[244/A] |
| 1 | 6562435090 | Painted body with u.p. | 1 | **Colour:**Shiny Black[94]<br>**Colour:**Shiny Black[94]<br>**Colour:**Shiny Black[94] |
| 1 | 6749505090 | Complete body | 1 | **Colour:**Shiny Black[94] |
| 1 | 65624350AI | Painted body with u.p. | 1 | **Colour:**Mizar Orange[938/A] |
| 1 | 65624301 | Cataphoresis body with U.P. | 1 | |
| 2 | 298604 | Lock support | 1 | |
| 4 | 018509 | screw | 1 | |
| 4 | CM179301 | Screw M6x16 | 2 | |
| 5 | 097734 | Washer | 1 | |
| 6 | 272836 | Screw M6x16 | 2 | |
| 7 | B016777 | Screw w/ flange M6x16 | 3 | |
| 8 | 654282 | Fairing connecting plate | 1 | |
| 9 | 6221145 | Body shield | 1 | |

| | |
|---|---|
| **Group** | Frame - Plastic parts - Coachwork |
| **Code** | 02.25 |
| **Description** | Stand/s |
| **Service** | 1 |

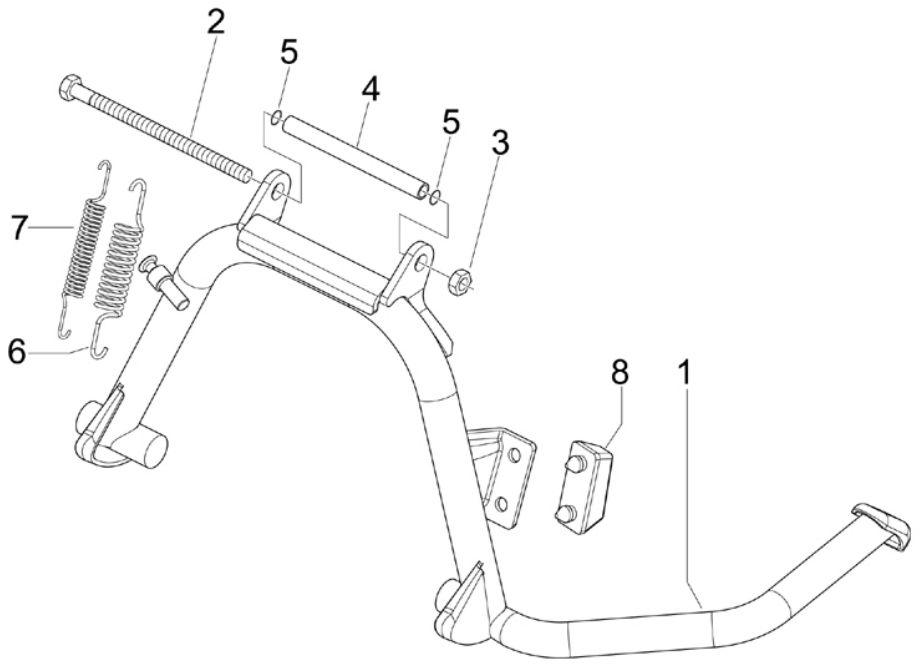


| Pos. | Code | Description | Qty | Variants |
|---|---|---|---|---|
| 1 | 582060 | Central stand | 1 | |
| 2 | 030115 | Hex screw M10x130 | 1 | |
| 3 | 002440 | Self locking nut M10 | 1 | |
| 4 | 582298 | Spacer | 1 | |
| 5 | 273754 | O-ring | 2 | |
| 6 | 582504 | Spring | 1 | |
| 7 | 582505 | Spring | 1 | |
| 8 | 563984 | Pad | 1 | |

| | |
|---|---|
| **Group** | Frame - Plastic parts - Coachwork |
| **Code** | 02.26 |
| **Description** | Front shield |
| **Service** | 1 |

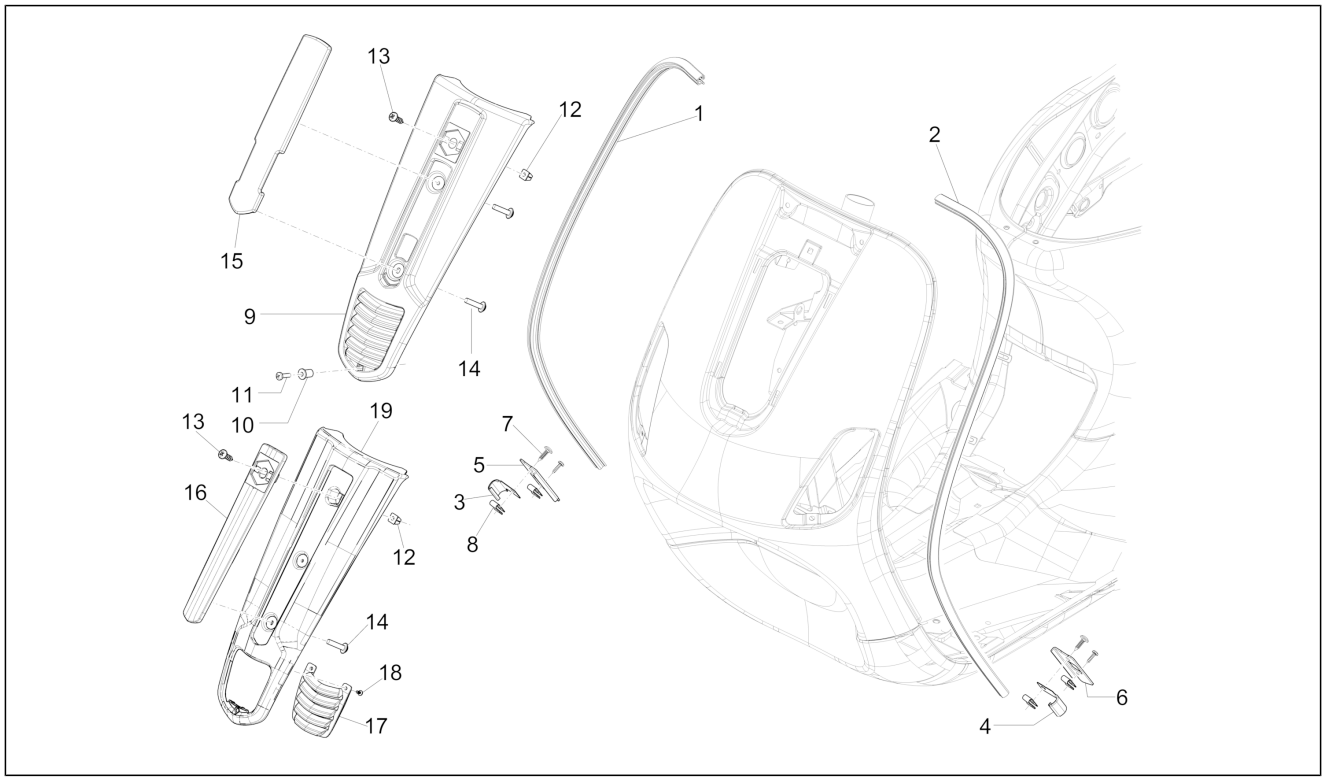


| Pos. | Code | Description | Qty | Variants |
|---|---|---|---|---|
| 1 | 622188 | Right-hand shield edge | 1 | |
| 2 | 622187 | Left-hand shield edge | 1 | |
| 3 | 299965 | Butt strap DX | 1 | |
| 4 | 299964 | Butt strap SX | 1 | |
| 5 | 654913 | Right lower bracket of the leg shield back plate fix | 1 | |
| 6 | 654899 | Left lower bracket of the leg shield back plate fix | 1 | |
| 7 | 268596 | Plug screw | 2 | |
| 8 | CM017403 | Spring plate | 2 | |
| 9 | 65488350BR | Steering column cover | 1 | **Colour:**White/Blue College[544 - 231/A]<br>**Colour:**White[544]<br>**Colour:**White[544]<br>**Colour:**White/Red College[544 - 894]<br>**Colour:**White/Red College[544 - 894] |
| 9 | 65488350AI | Steering column cover | 1 | **Colour:**Mizar Orange[938/A] |
| 9 | 6548835090 | Steering column cover | 1 | **Colour:**Shiny Black[94]<br>**Colour:**Shiny Black[94] |
| 9 | 65488350R7 | Steering column cover | 1 | **Colour:**DRAGON RED[894]<br>**Colour:**DRAGON RED[894] |
| 9 | 65488300DI | Steering column cover | 1 | **Colour:**Pastel blue[244/A] |
| 10 | AP8144564 | Rubber w/ insert M4 | 1 | |
| 11 | 018544 | screw | 1 | |
| 12 | 199190 | Expansion plug | 1 | |
| 13 | CM179101 | Self-tapping screw | 1 | |
| 14 | 297498 | Self tapping screw | 2 | |
| 15 | 654272 | Front moulding | 1 | |
| 16 | 675324 | Flange | 1 | |
| 17 | 675325 | Grid | 1 | |
| 18 | 008432 | screw M3,5x9,5 | 2 | |
| 19 | 675323 | Steering column cover | 1 | |
| 19 | 67532300NL | Steering column cover | 1 | **Colour:**Semi glossy black[85/B] |

| | |
|---|---|
| **Group** | Frame - Plastic parts - Coachwork |
| **Code** | 02.26 |
| **Description** | Front shield |
| **Service** | 1 |

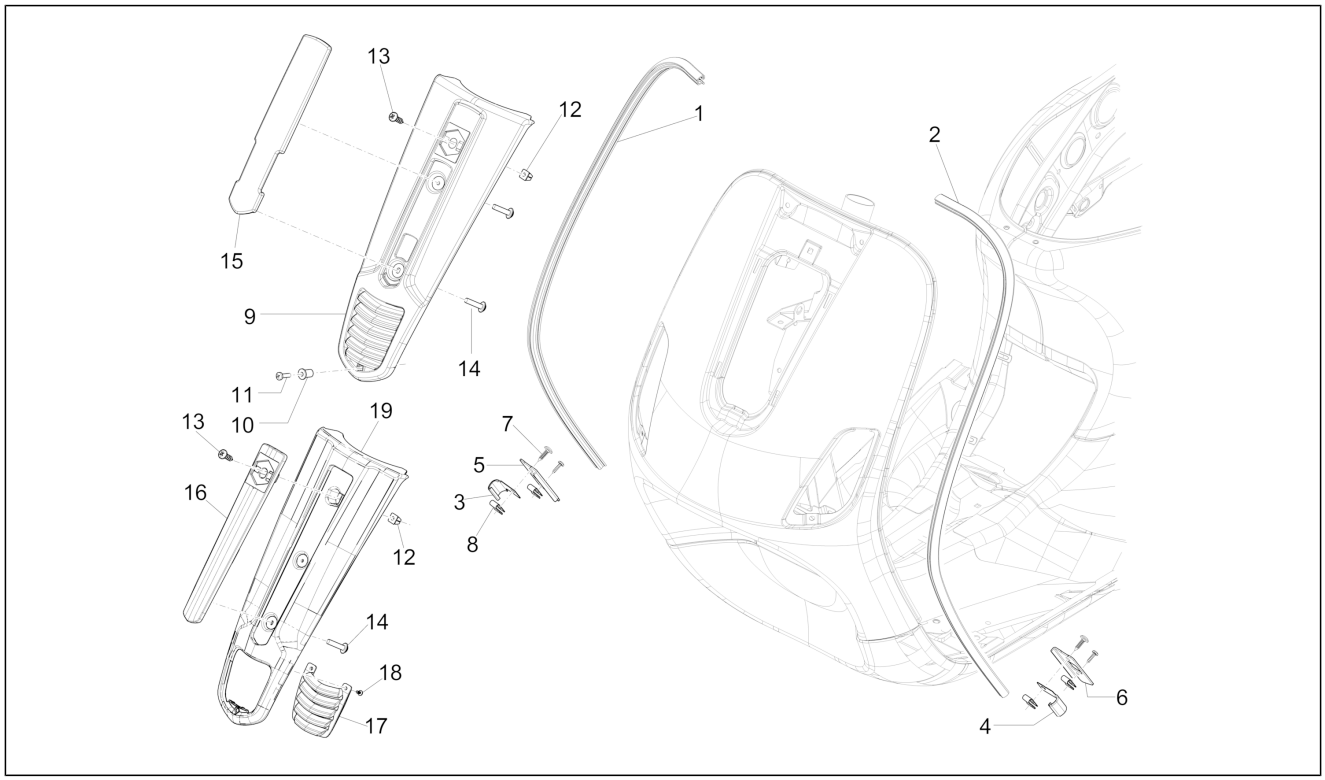


| Pos. | Code | Description | Qty | Variants |
|---|---|---|---|---|
| | | | | **Colour:**Semi glossy black[85/B] |
| 19 | 67532300BR | Painted steering cover | 1 | **Colour:**White[544]<br>**Colour:**White[544] |
| 19 | 67532300DI | Painted steering cover | 1 | **Colour:**Pastel blue[244/A] |
| 19 | 6753230090 | Painted steering cover | 1 | **Colour:**Shiny Black[94]<br>**Colour:**Shiny Black[94] |
| 19 | 67532340R7 | Painted steering cover | 1 | **Colour:**DRAGON RED[894]<br>**Colour:**DRAGON RED[894] |

| | |
|---|---|
| **Group** | Frame - Plastic parts - Coachwork |
| **Code** | 02.30 |
| **Description** | Front glove-box - Knee-guard panel |
| **Service** | 1 |

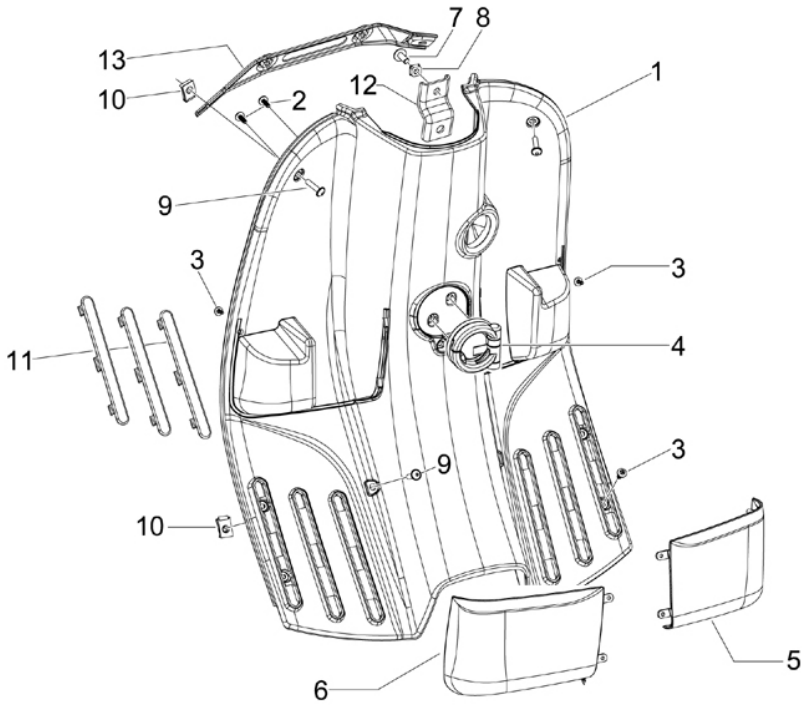


| Pos. | Code | Description | Qty | Variants |
|---|---|---|---|---|
| 1 | 67495400BR | Painted leg shield back plate | 1 | **Colour:**White[544]<br>**Colour:**White[544]<br>**Colour:**White[544]<br>**Colour:**White[544] |
| 1 | 65425600AH | Counter shield | 1 | **Colour:**White/Blue College[544 - 231/A] |
| 1 | 6749540090 | Painted leg shield back plate | 1 | **Colour:**Shiny Black[94]<br>**Colour:**Shiny Black[94]<br>**Colour:**Shiny Black[94]<br>**Colour:**Shiny Black[94] |
| 1 | 67495400AI | Painted leg shield back plate | 1 | **Colour:**Mizar Orange[938/A] |
| 1 | 67495400DI | Painted leg shield back plate | 1 | **Colour:**Pastel blue[244/A]<br>**Colour:**Pastel blue[244/A] |
| 1 | 67495400NL | Counter shield | 1 | **Colour:**Semi glossy black[85/B]<br>**Colour:**Semi glossy black[85/B] |
| 1 | 67495400R7 | Painted leg shield back plate | 1 | **Colour:**White/Red College[544 - 894]<br>**Colour:**DRAGON RED[894]<br>**Colour:**DRAGON RED[894]<br>**Colour:**White/Red College[544 - 894]<br>**Colour:**DRAGON RED[894]<br>**Colour:**DRAGON RED[894] |
| 1 | 674954 | Counter shield | 1 | |
| 2 | CM178603 | Self tapping screw D4.2x13 | 2 | |
| 2 | 259349 | Screw M4,2x13 | 2 | |
| 3 | 297498 | Self tapping screw | 8 | |
| 4 | 575819 | Bag holder hook | 1 | |
| 5 | 65429500AI | Right glovebox | 1 | **Colour:**Mizar Orange[938/A] |
| 5 | 65429500R7 | Right glovebox | 1 | **Colour:**White/Red College[544 - 894]<br>**Colour:**DRAGON RED[894]<br>**Colour:**DRAGON RED[894]<br>**Colour:**White/Red College[544 - 894]<br>**Colour:**DRAGON RED[894]<br>**Colour:**DRAGON RED[894] |
| 5 | 65429500BR | Right glovebox | 1 | **Colour:**White[544] |

| | |
|---|---|
| **Group** | Frame - Plastic parts - Coachwork |
| **Code** | 02.30 |
| **Description** | Front glove-box - Knee-guard panel |
| **Service** | 1 |

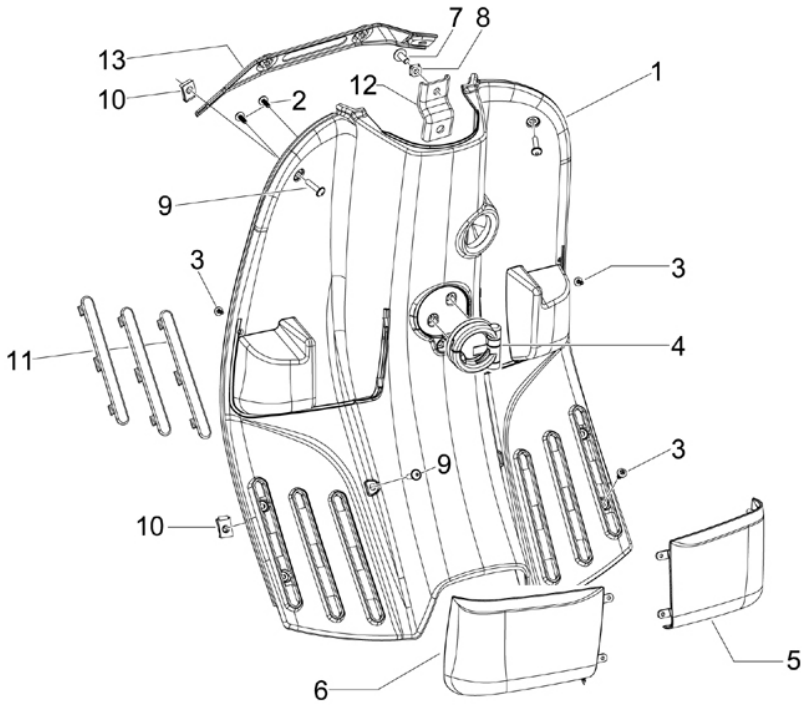


| Pos. | Code | Description | Qty | Variants |
|---|---|---|---|---|
| | | | | **Colour:**White[544]<br>**Colour:**White[544]<br>**Colour:**White[544] |
| 5 | 65429500DI | Right glovebox | 1 | **Colour:**Pastel blue[244/A]<br>**Colour:**Pastel blue[244/A] |
| 5 | 6542950090 | Right glovebox | 1 | **Colour:**Shiny Black[94]<br>**Colour:**Shiny Black[94]<br>**Colour:**Shiny Black[94]<br>**Colour:**Shiny Black[94] |
| 5 | 654295 | Right glovebox | 1 | |
| 5 | 65429500NL | Right glovebox | 1 | **Colour:**Semi glossy black[85/B]<br>**Colour:**Semi glossy black[85/B] |
| 5 | 65429500AH | Right glovebox | 1 | **Colour:**White/Blue College[544 - 231/A] |
| 6 | 65429400BR | Left glovebox | 1 | **Colour:**White[544]<br>**Colour:**White[544]<br>**Colour:**White[544]<br>**Colour:**White[544] |
| 6 | 6542940090 | Left glovebox | 1 | **Colour:**Shiny Black[94]<br>**Colour:**Shiny Black[94]<br>**Colour:**Shiny Black[94]<br>**Colour:**Shiny Black[94] |
| 6 | 654294 | Left glovebox | 1 | |
| 6 | 65429400AH | Left glovebox | 1 | **Colour:**White/Blue College[544 - 231/A] |
| 6 | 65429400R7 | Left glovebox | 1 | **Colour:**White/Red College[544 - 894]<br>**Colour:**DRAGON RED[894]<br>**Colour:**DRAGON RED[894]<br>**Colour:**White/Red College[544 - 894]<br>**Colour:**DRAGON RED[894]<br>**Colour:**DRAGON RED[894] |
| 6 | 65429400AI | Left glovebox | 1 | **Colour:**Mizar Orange[938/A] |
| 6 | 65429400NL | Left glovebox | 1 | **Colour:**Semi glossy black[85/B]<br>**Colour:**Semi glossy black[85/B] |
| 6 | 65429400DI | Left glovebox | 1 | **Colour:**Pastel blue[244/A] |

| | |
|---|---|
| **Group** | Frame - Plastic parts - Coachwork |
| **Code** | 02.30 |
| **Description** | Front glove-box - Knee-guard panel |
| **Service** | 1 |

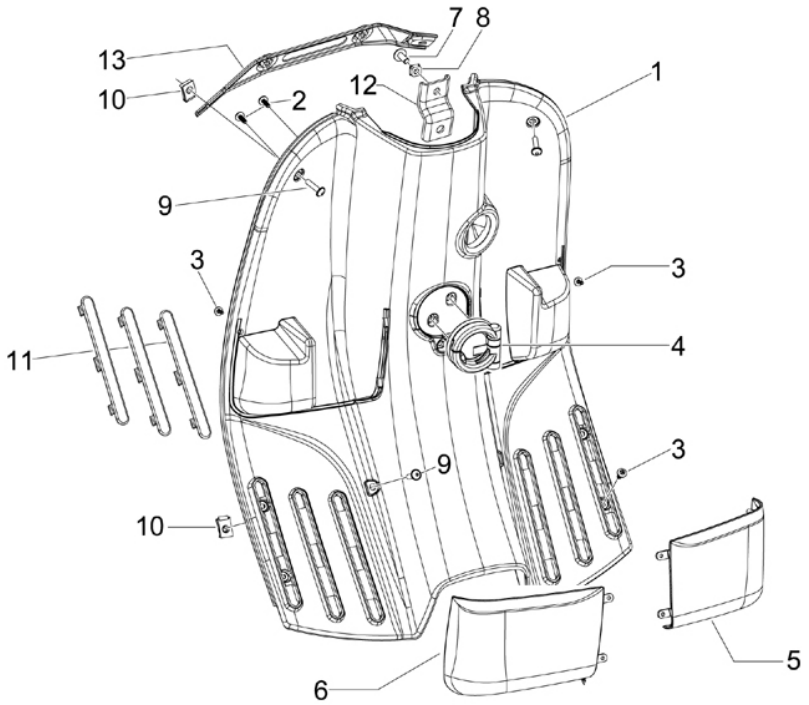


| Pos. | Code | Description | Qty | Variants |
|---|---|---|---|---|
| | | | | **Colour:**Pastel blue[244/A] |
| 7 | CM178601 | Self tapping screw D4.2x16 | 2 | |
| 7 | 259349 | Screw M4,2x13 | 2 | |
| 8 | CM017409 | Spring plate | 2 | |
| 9 | AP8152338 | Screw w/ flange | 5 | |
| 10 | 248419 | Spring plate M5 | 5 | |
| 11 | 654297 | Packing | 6 | |
| 12 | 654292 | Leg shield back plate fixing central bracket | 1 | |
| 13 | 654290 | Upper fixing bracket of the leg shield back plate with U.P. | 1 | |

| | |
|---|---|
| **Group** | Frame - Plastic parts - Coachwork |
| **Code** | 02.31 |
| **Description** | Central cover - Footrests |
| **Service** | 1 |

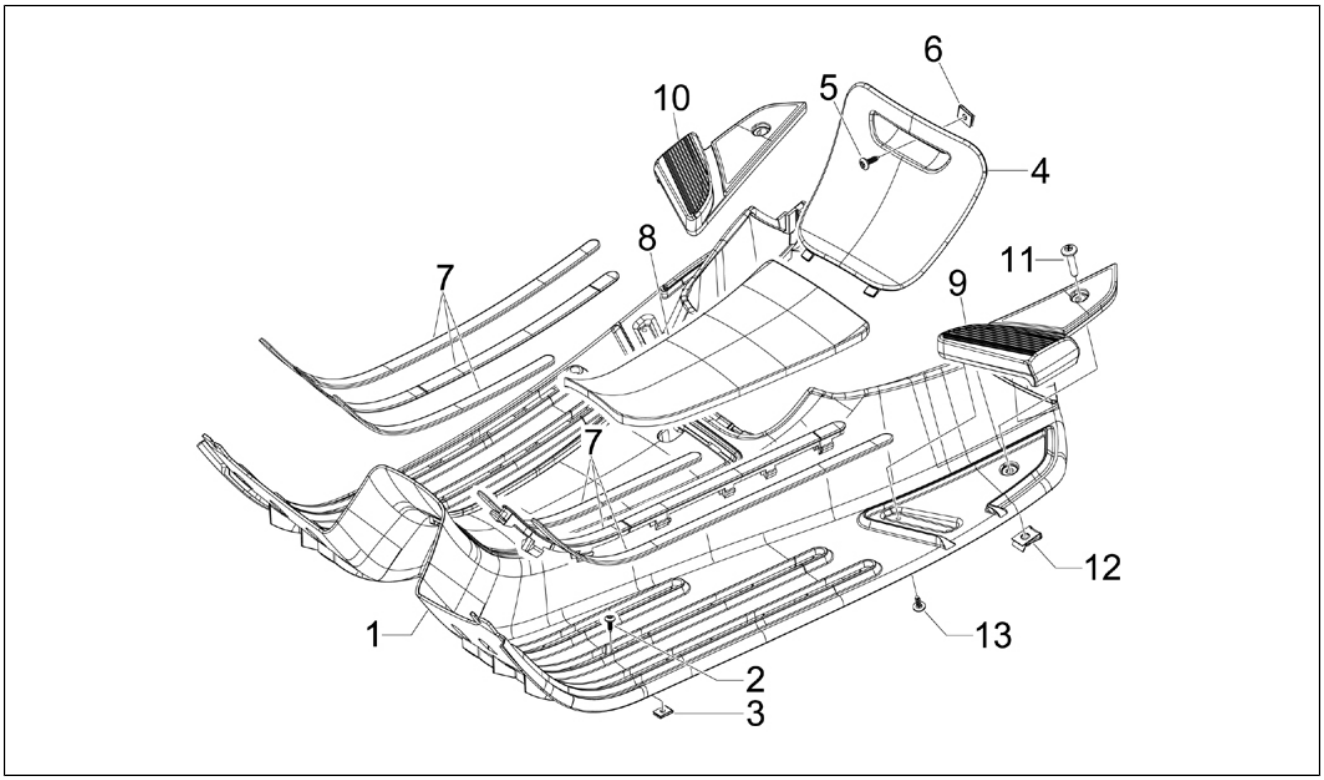


| Pos. | Code | Description | Qty | Variants |
|---|---|---|---|---|
| 1 | 62212440R7 | Painted footrest | 1 | **Colour:**White/Red College[544 - 894]<br>**Colour:**DRAGON RED[894]<br>**Colour:**DRAGON RED[894]<br>**Colour:**White/Red College[544 - 894]<br>**Colour:**DRAGON RED[894] |
| 1 | 6221244090 | Painted footrest | 1 | **Colour:**Shiny Black[94]<br>**Colour:**Shiny Black[94]<br>**Colour:**Shiny Black[94]<br>**Colour:**Shiny Black[94] |
| 1 | 62212440BR | Painted footrest | 1 | **Colour:**White[544]<br>**Colour:**White[544]<br>**Colour:**White[544]<br>**Colour:**White[544] |
| 1 | 62212440AI | Painted footrest | 1 | **Colour:**Mizar Orange[938/A] |
| 1 | 62212440NL | Painted footrest | 1 | **Colour:**Semi glossy black[85/B]<br>**Colour:**Semi glossy black[85/B] |
| 1 | 62212440DI | Footrest | 1 | **Colour:**Pastel blue[244/A]<br>**Colour:**Pastel blue[244/A] |
| 1 | 62212440AH | Footrest | 1 | **Colour:**White/Blue College[544 - 231/A] |
| 2 | CM178601 | Self tapping screw D4.2x16 | 2 | |
| 2 | 259349 | Screw M4,2x13 | 2 | |
| 3 | CM017406 | Plate | 2 | |
| 4 | 62213650BR | Painted spark plug inspection cover | 1 | **Colour:**White/Blue College[544 - 231/A]<br>**Colour:**White[544]<br>**Colour:**White/Red College[544 - 894]<br>**Colour:**White[544]<br>**Colour:**White/Red College[544 - 894]<br>**Colour:**White[544]<br>**Colour:**White[544] |
| 4 | 62213650R7 | Painted spark plug inspection cover | 1 | **Colour:**DRAGON RED[894]<br>**Colour:**DRAGON RED[894]<br>**Colour:**DRAGON RED[894]<br>**Colour:**DRAGON RED[894] |

| | |
|---|---|
| **Group** | Frame - Plastic parts - Coachwork |
| **Code** | 02.31 |
| **Description** | Central cover - Footrests |
| **Service** | 1 |

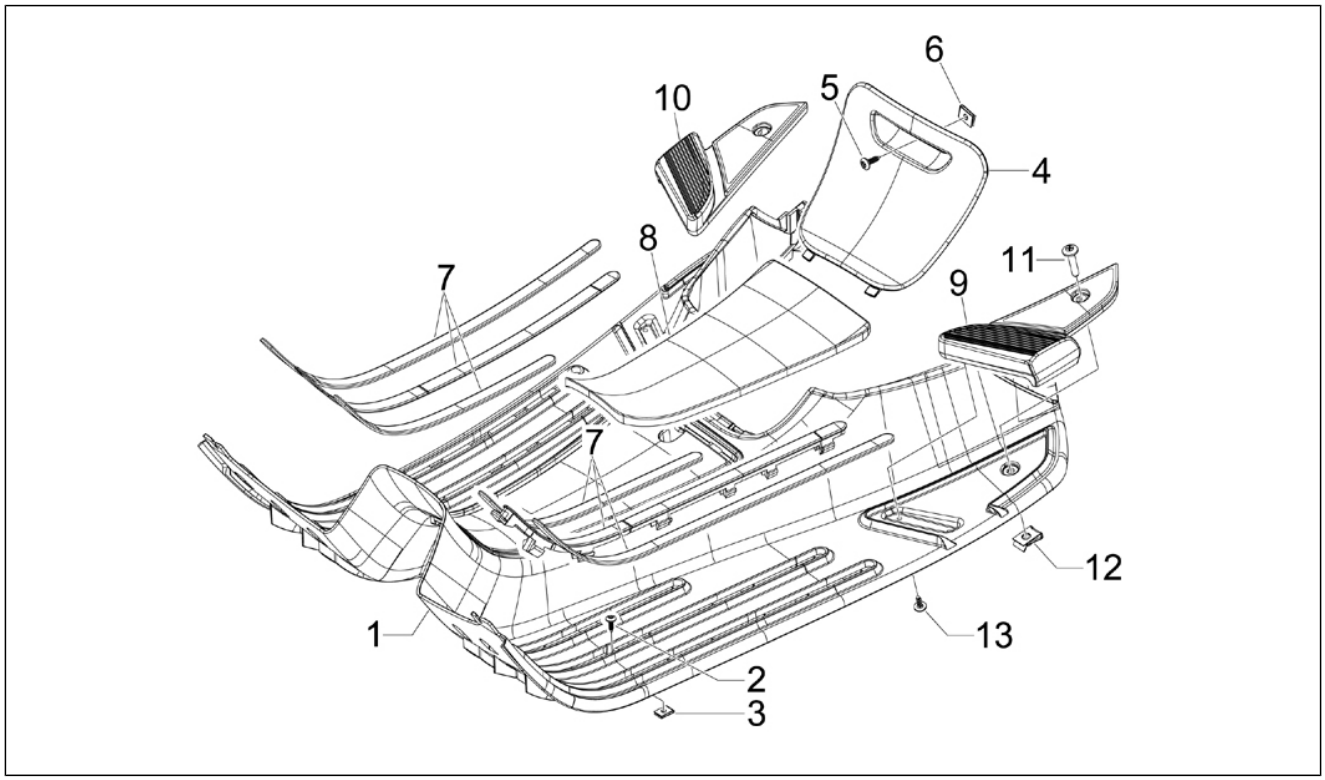


| Pos. | Code | Description | Qty | Variants |
|---|---|---|---|---|
| 4 | 6221366 | Spark plug insp. door | 1 | |
| 4 | 62213650DI | Spark plug insp. door | 1 | **Colour:**Pastel blue[244/A]<br>**Colour:**Pastel blue[244/A] |
| 4 | 62213650AI | Painted spark plug inspection cover | 1 | **Colour:**Mizar Orange[938/A] |
| 4 | 62213650NL | Spark plug insp. door | 1 | **Colour:**Semi glossy black[85/B]<br>**Colour:**Semi glossy black[85/B] |
| 4 | 6221365090 | Spark plug insp. door | 1 | **Colour:**Shiny Black[94]<br>**Colour:**Shiny Black[94]<br>**Colour:**Shiny Black[94]<br>**Colour:**Shiny Black[94] |
| 5 | 259349 | Screw M4,2x13 | 1 | |
| 5 | 015911 | Self tapping screw 4,2x16 | 1 | |
| 6 | 199190 | Expansion plug | 1 | |
| 6 | CM017408 | Plate | 1 | |
| 7 | 657126 | Kit strips, footboard | 1 | |
| 8 | 675041 | Central mat | 1 | |
| 8 | 57345R | Central mat | 1 | |
| 9 | 622125 | LH footrest | 1 | |
| 10 | 622126 | RH footpad | 1 | |
| 11 | 271891 | Screw m6x30 | 2 | |
| 11 | CM179305 | screw M6x25 | 2 | |
| 11 | CM179303 | Screw metrica | 2 | |
| 12 | 254485 | Spring plate M6 | 2 | |
| 13 | 297498 | Self tapping screw | 4 | |

| | |
|---|---|
| **Group** | Frame - Plastic parts - Coachwork |
| **Code** | 02.32 |
| **Description** | Side cover - Spoiler |
| **Service** | 1 |

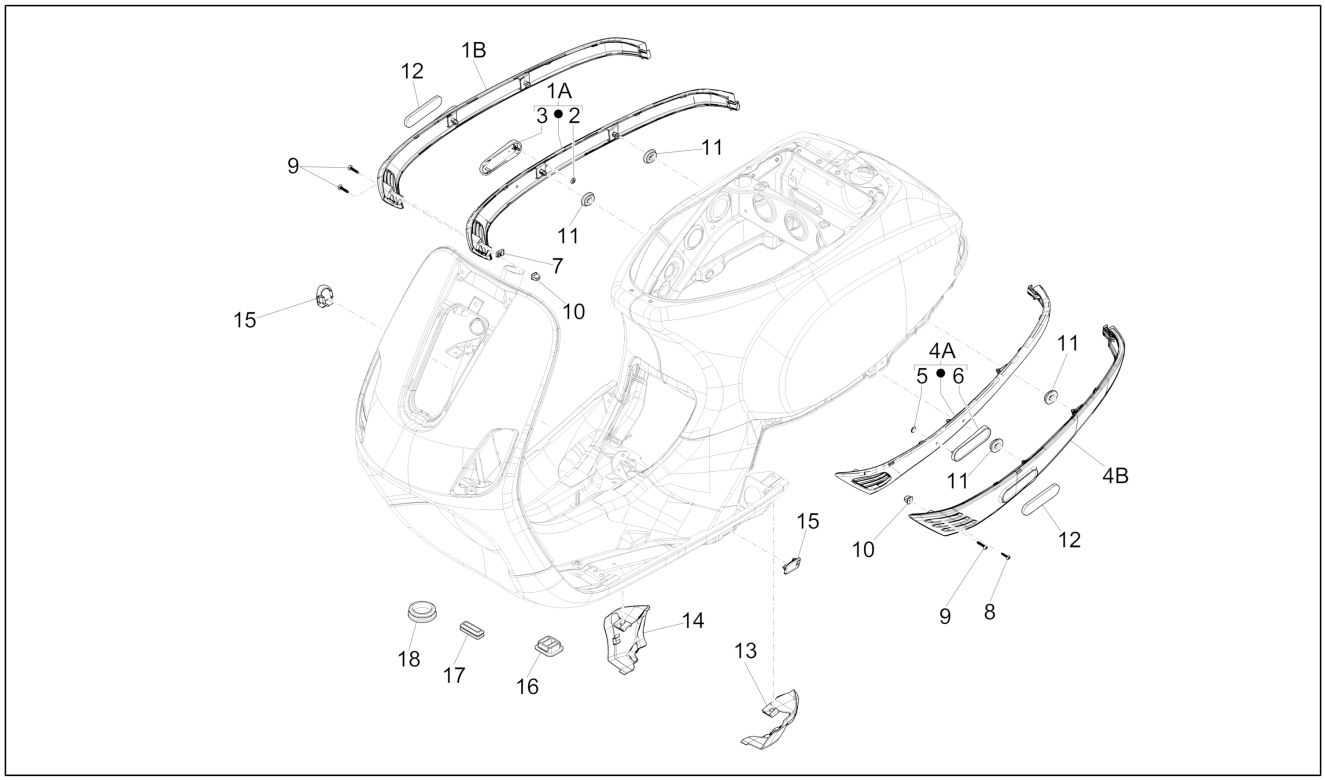


| Pos. | Code | Description | Qty | Variants |
|---|---|---|---|---|
| 2 | 181351 | Spring plate | 2 | |
| 3 | 65430700BR | Base plate for right lateral retroreflector | 1 | **Colour:**White[544] |
| 3 | 65430700R7 | Base plate for right lateral retroreflector | 1 | **Colour:**DRAGON RED[894]<br>**Colour:**White/Red College[544 - 894] |
| 3 | 6543070090 | Base plate for right lateral retroreflector | 1 | **Colour:**Shiny Black[94] |
| 3 | 65430700AI | Base plate for right lateral retroreflector | 1 | **Colour:**Mizar Orange[938/A] |
| 5 | 181351 | Spring plate | 2 | |
| 6 | 6543060090 | Base plate for left lateral retroreflector | 1 | **Colour:**Shiny Black[94] |
| 6 | 65430600AI | Base plate for left lateral retroreflector | 1 | **Colour:**Mizar Orange[938/A] |
| 6 | 65430600R7 | Base plate for left lateral retroreflector | 1 | **Colour:**White/Red College[544 - 894]<br>**Colour:**DRAGON RED[894] |
| 6 | 65430600BR | Base plate for left lateral retroreflector | 1 | **Colour:**White[544] |
| 6 | 65430600AH | Base plate for left lateral retroreflector | 1 | **Colour:**White/Blue College[544 - 231/A] |
| 7 | CM017410 | Spring plate | 1 | |
| 8 | 297498 | Self tapping screw | 1 | |
| 9 | CM178603 | Self tapping screw D4.2x13 | 3 | |
| 9 | 259349 | Screw M4,2x13 | 3 | |
| 10 | 199190 | Expansion plug | 2 | |
| 11 | 463195 | Elastic drift | 4 | |
| 12 | 58233R | Rear retroreflector | 2 | |
| 13 | 62212940BR | Left spoiler rear terminal | 1 | **Colour:**White[544]<br>**Colour:**White[544]<br>**Colour:**White[544]<br>**Colour:**White[544] |
| 13 | 62212940AI | Left spoiler rear terminal | 1 | **Colour:**Mizar Orange[938/A] |
| 13 | 6221294090 | Left spoiler rear terminal | 1 | **Colour:**Shiny Black[94]<br>**Colour:**Shiny Black[94]<br>**Colour:**Shiny Black[94]<br>**Colour:**Shiny Black[94] |
| 13 | 62212940DI | Spoiler left rear terminal | 1 | **Colour:**Pastel blue[244/A] |

| | |
|---|---|
| **Group** | Frame - Plastic parts - Coachwork |
| **Code** | 02.32 |
| **Description** | Side cover - Spoiler |
| **Service** | 1 |

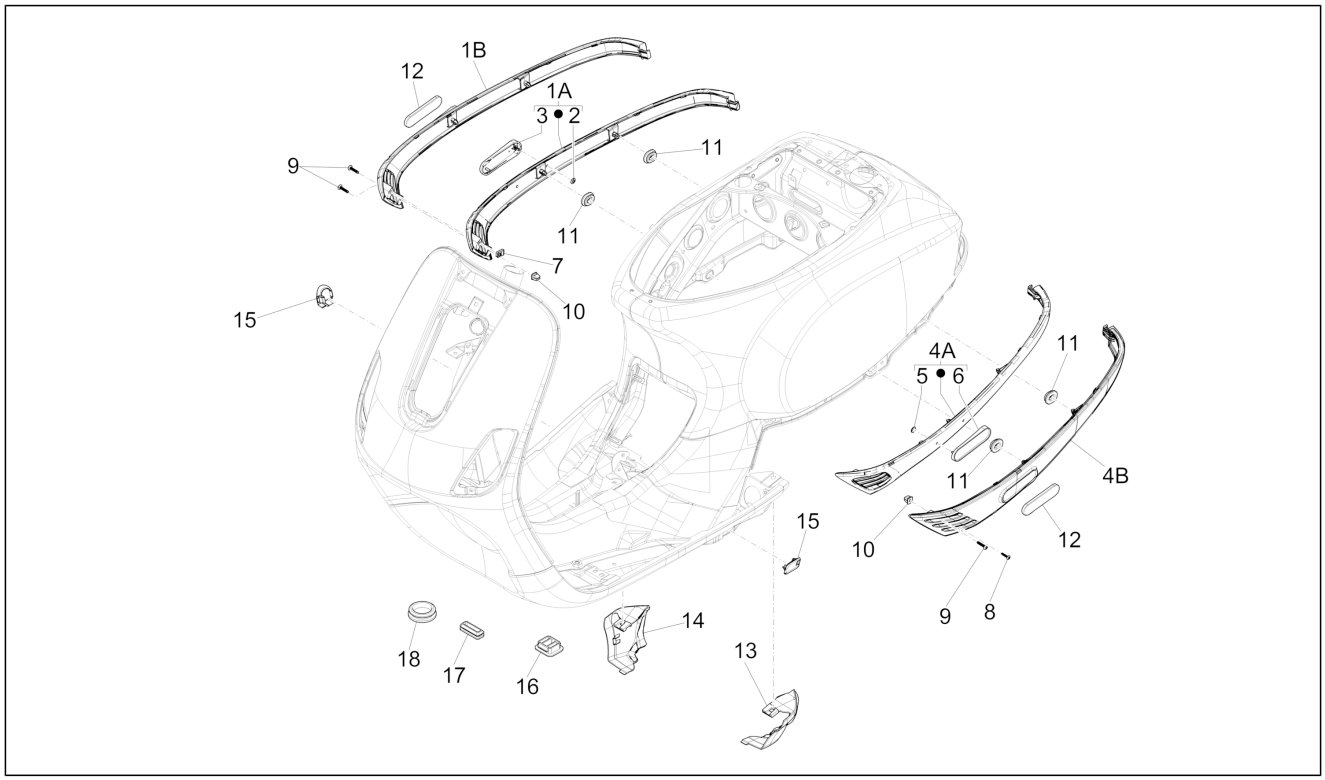


| Pos. | Code | Description | Qty | Variants |
|---|---|---|---|---|
| | | | | **Colour:**Pastel blue[244/A] |
| 13 | 62212940NL | Left spoiler rear terminal | 1 | **Colour:**Semi glossy black[85/B]<br>**Colour:**Semi glossy black[85/B] |
| 13 | 62212940R7 | Left spoiler rear terminal | 1 | **Colour:**DRAGON RED[894]<br>**Colour:**White/Red College[544 - 894]<br>**Colour:**DRAGON RED[894]<br>**Colour:**White/Red College[544 - 894]<br>**Colour:**DRAGON RED[894]<br>**Colour:**DRAGON RED[894] |
| 14 | 6221304090 | Right spoiler rear terminal | 1 | **Colour:**Shiny Black[94]<br>**Colour:**Shiny Black[94]<br>**Colour:**Shiny Black[94]<br>**Colour:**Shiny Black[94] |
| 14 | 62213040R7 | Right spoiler rear terminal | 1 | **Colour:**DRAGON RED[894]<br>**Colour:**White/Red College[544 - 894]<br>**Colour:**DRAGON RED[894]<br>**Colour:**White/Red College[544 - 894]<br>**Colour:**DRAGON RED[894]<br>**Colour:**DRAGON RED[894] |
| 14 | 62213040DI | Right spoiler rear terminal | 1 | **Colour:**Pastel blue[244/A]<br>**Colour:**Pastel blue[244/A] |
| 14 | 62213040NL | Right spoiler rear terminal | 1 | **Colour:**Semi glossy black[85/B]<br>**Colour:**Semi glossy black[85/B] |
| 14 | 62213040BR | Right spoiler rear terminal | 1 | **Colour:**White[544]<br>**Colour:**White[544]<br>**Colour:**White[544]<br>**Colour:**White[544] |
| 14 | 62213040AI | Right spoiler rear terminal | 1 | **Colour:**Mizar Orange[938/A] |
| 15 | 620556 | Spoiler cover | 2 | |
| 16 | 299557 | Cover | 2 | |
| 17 | 299558 | Cover | 1 | |
| 18 | 299559 | Cover | 1 | |
| 1A | 6547360090 | Complete right lower fairing. | 1 | **Colour:**Shiny Black[94] |

| | |
|---|---|
| **Group** | Frame - Plastic parts - Coachwork |
| **Code** | 02.32 |
| **Description** | Side cover - Spoiler |
| **Service** | 1 |

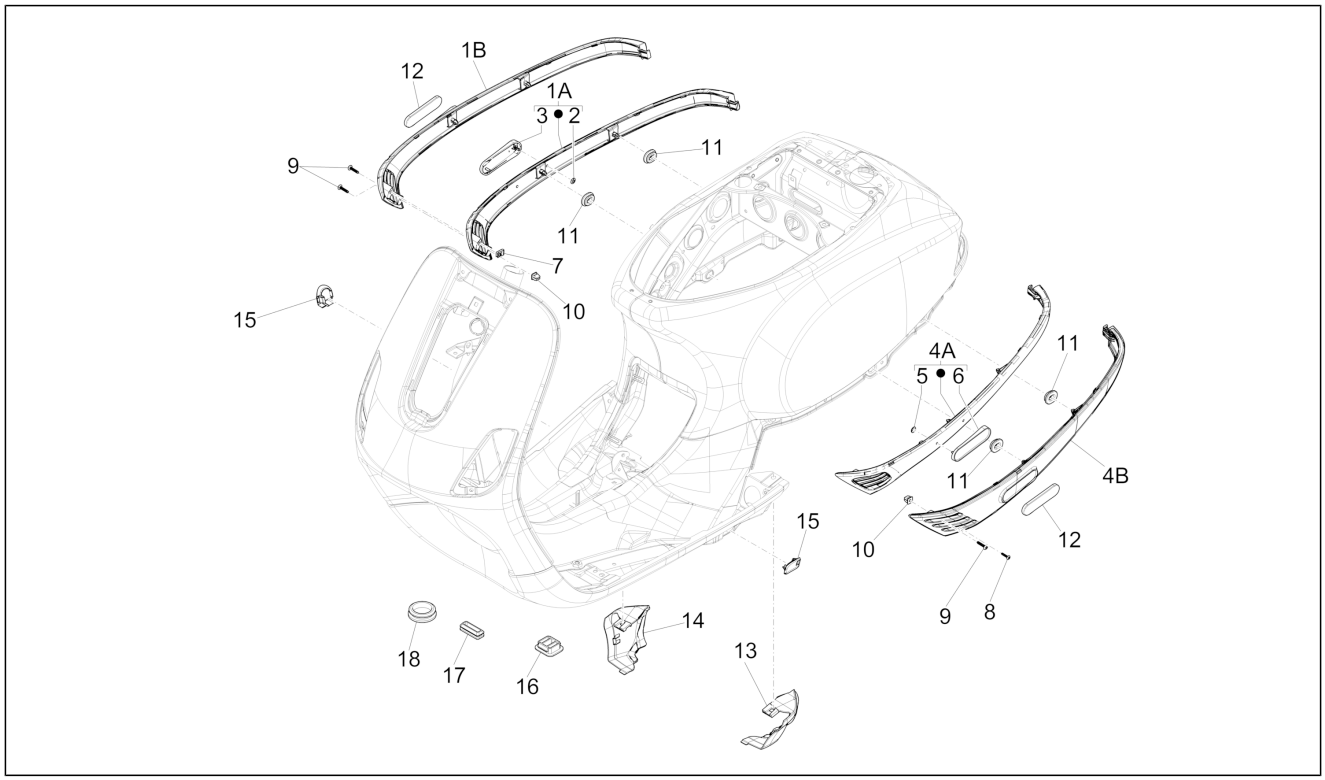


| Pos. | Code | Description | Qty | Variants |
|---|---|---|---|---|
| 1A | 65473600BR | Complete right lower fairing. | 1 | **Colour:**White[544] |
| 1A | 65473600AI | Complete right lower fairing. | 1 | **Colour:**Mizar Orange[938/A] |
| 1A | 65473600AH | Complete right lower fairing. | 1 | **Colour:**White/Blue College[544 - 231/A] |
| 1A | 65473600R7 | Complete right lower fairing. | 1 | **Colour:**White/Red College[544 - 894]<br>**Colour:**DRAGON RED[894]<br>**Colour:**White/Red College[544 - 894] |
| 1A | 654736 | Complete right lower fairing. | 1 | |
| 1B | 67232600R7 | Right lower fairing | 1 | **Colour:**White/Red College[544 - 894]<br>**Colour:**DRAGON RED[894]<br>**Colour:**DRAGON RED[894]<br>**Colour:**White/Red College[544 - 894]<br>**Colour:**DRAGON RED[894]<br>**Colour:**DRAGON RED[894] |
| 1B | 67232600AH | Right lower fairing | 1 | **Colour:**White/Blue College[544 - 231/A] |
| 1B | 67232600DI | Right lower fairing | 1 | **Colour:**Pastel blue[244/A]<br>**Colour:**Pastel blue[244/A] |
| 1B | 6723260090 | Right lower fairing | 1 | **Colour:**Shiny Black[94]<br>**Colour:**Shiny Black[94]<br>**Colour:**Shiny Black[94]<br>**Colour:**Shiny Black[94] |
| 1B | 67232600BR | Right lower fairing | 1 | **Colour:**White[544]<br>**Colour:**White[544]<br>**Colour:**White[544]<br>**Colour:**White[544] |
| 1B | 67232600NL | Right lower fairing | 1 | **Colour:**Semi glossy black[85/B]<br>**Colour:**Semi glossy black[85/B] |
| 1B | 67232600AI | Right lower fairing | 1 | **Colour:**Mizar Orange[938/A] |
| 1B | 672326 | Right lower fairing | 1 | |
| 4A | 65473500AH | Complete left lower fairing. | 1 | **Colour:**White/Blue College[544 - 231/A] |
| 4A | 65473500AI | Complete left lower fairing. | 1 | **Colour:**Mizar Orange[938/A] |
| 4A | 65473500BR | Complete left lower fairing. | 1 | **Colour:**White[544] |
| 4A | 6547350090 | Complete left lower fairing. | 1 | **Colour:**Shiny Black[94] |

| | |
|---|---|
| **Group** | Frame - Plastic parts - Coachwork |
| **Code** | 02.32 |
| **Description** | Side cover - Spoiler |
| **Service** | 1 |

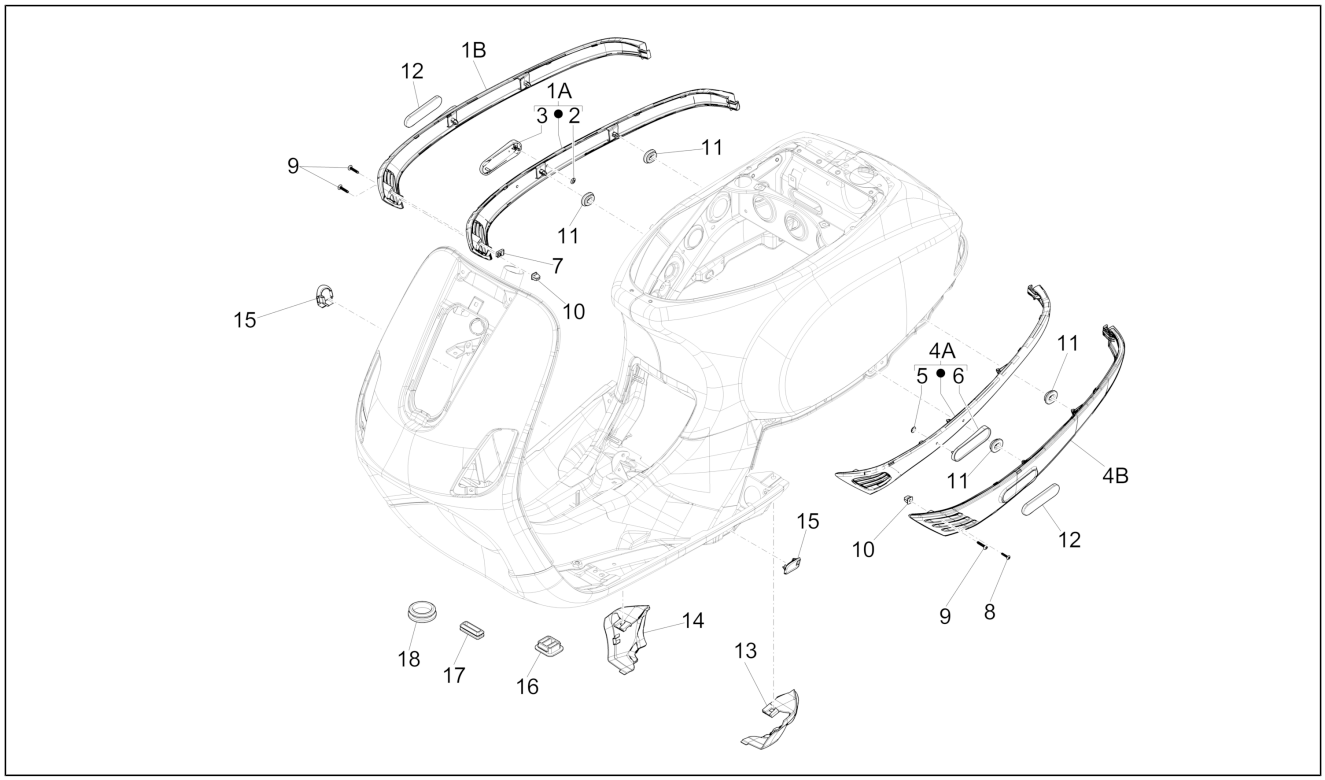


| Pos. | Code | Description | Qty | Variants |
|---|---|---|---|---|
| 4A | 65473500R7 | Complete left lower fairing. | 1 | **Colour:**White/Red College[544 - 894]<br>**Colour:**DRAGON RED[894]<br>**Colour:**White/Red College[544 - 894]<br>**Colour:**DRAGON RED[894] |
| 4B | 672325 | Left lower fairing | 1 | |
| 4B | 67232500DI | Left lower fairing | 1 | **Colour:**Pastel blue[244/A]<br>**Colour:**Pastel blue[244/A] |
| 4B | 67232500R7 | Left lower fairing | 1 | **Colour:**White/Red College[544 - 894]<br>**Colour:**DRAGON RED[894]<br>**Colour:**DRAGON RED[894]<br>**Colour:**White/Red College[544 - 894]<br>**Colour:**DRAGON RED[894]<br>**Colour:**DRAGON RED[894] |
| 4B | 67232500BR | Left lower fairing | 1 | **Colour:**White[544]<br>**Colour:**White[544]<br>**Colour:**White[544]<br>**Colour:**White[544] |
| 4B | 67232500AH | Left lower fairing | 1 | **Colour:**White/Blue College[544 - 231/A] |
| 4B | 67232500AI | Left lower fairing | 1 | **Colour:**Mizar Orange[938/A] |
| 4B | 67232500NL | Left lower fairing | 1 | **Colour:**Semi glossy black[85/B]<br>**Colour:**Semi glossy black[85/B] |
| 4B | 6723250090 | Left lower fairing | 1 | **Colour:**Shiny Black[94]<br>**Colour:**Shiny Black[94]<br>**Colour:**Shiny Black[94]<br>**Colour:**Shiny Black[94] |

| | |
|---|---|
| **Group** | Frame - Plastic parts - Coachwork |
| **Code** | 02.33 |
| **Description** | Wheel huosing - Mudguard |
| **Service** | 1 |

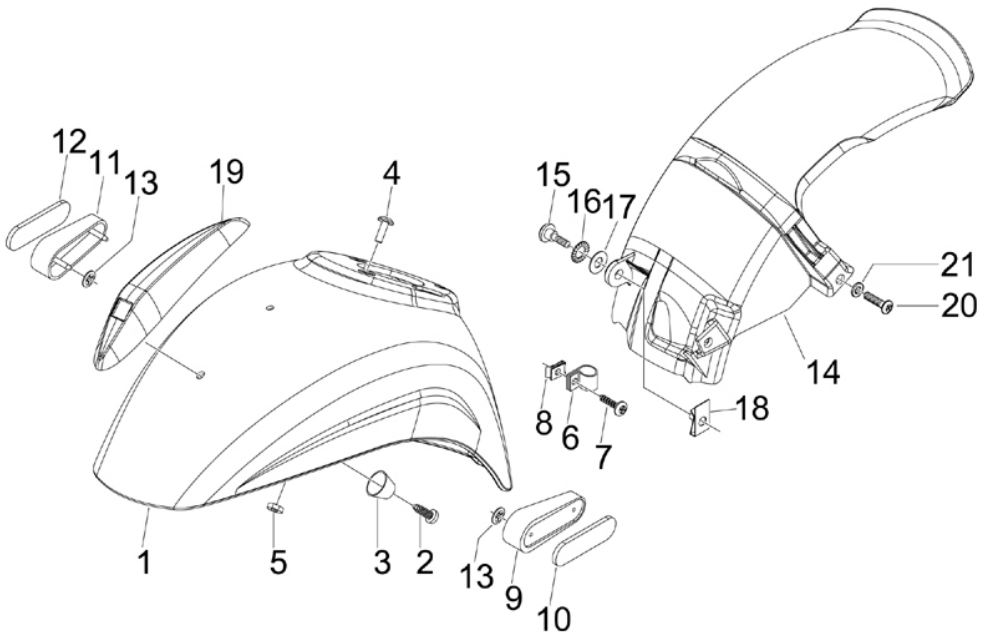


| Pos. | Code | Description | Qty | Variants |
|---|---|---|---|---|
| 1 | 66653000NL | Front mudguard | 1 | **Colour:**Semi glossy black[85/B]<br>**Colour:**Semi glossy black[85/B] |
| 1 | 66653000AI | Front mudguard | 1 | **Colour:**Mizar Orange[938/A] |
| 1 | 666530 | Front mudguard | 1 | |
| 1 | 6665300090 | Front mudguard | 1 | **Colour:**Shiny Black[94]<br>**Colour:**Shiny Black[94]<br>**Colour:**Shiny Black[94]<br>**Colour:**Shiny Black[94] |
| 1 | 66653000DI | Front mudguard | 1 | **Colour:**Pastel blue[244/A]<br>**Colour:**Pastel blue[244/A] |
| 1 | 66653000BR | Front mudguard | 1 | **Colour:**White/Blue College[544 - 231/A]<br>**Colour:**White/Red College[544 - 894]<br>**Colour:**White[544]<br>**Colour:**White[544]<br>**Colour:**White/Red College[544 - 894]<br>**Colour:**White[544]<br>**Colour:**White[544] |
| 1 | 66653000R7 | Front mudguard | 1 | **Colour:**DRAGON RED[894]<br>**Colour:**DRAGON RED[894]<br>**Colour:**White/Red College[544 - 894]<br>**Colour:**DRAGON RED[894]<br>**Colour:**DRAGON RED[894] |
| 2 | 015727 | Self tapping screw 2,9x9,5 | 2 | |
| 3 | 192598 | Cap | 2 | |
| 4 | CM179201 | Metric screw M6x22 | 3 | |
| 5 | 288245 | Self locking nut M6 | 3 | |
| 6 | 562919 | Hose clamp | 1 | |
| 7 | 015900 | Self tapping screw | 1 | |
| 8 | CM017410 | Spring plate | 1 | |
| 9 | 584078 | Bracket | 1 | |
| 10 | 584083 | Left lateral retroreflector | 1 | |
| 11 | 584079 | Bracket | 1 | |

| | |
|---|---|
| **Group** | Frame - Plastic parts - Coachwork |
| **Code** | 02.33 |
| **Description** | Wheel huosing - Mudguard |
| **Service** | 1 |

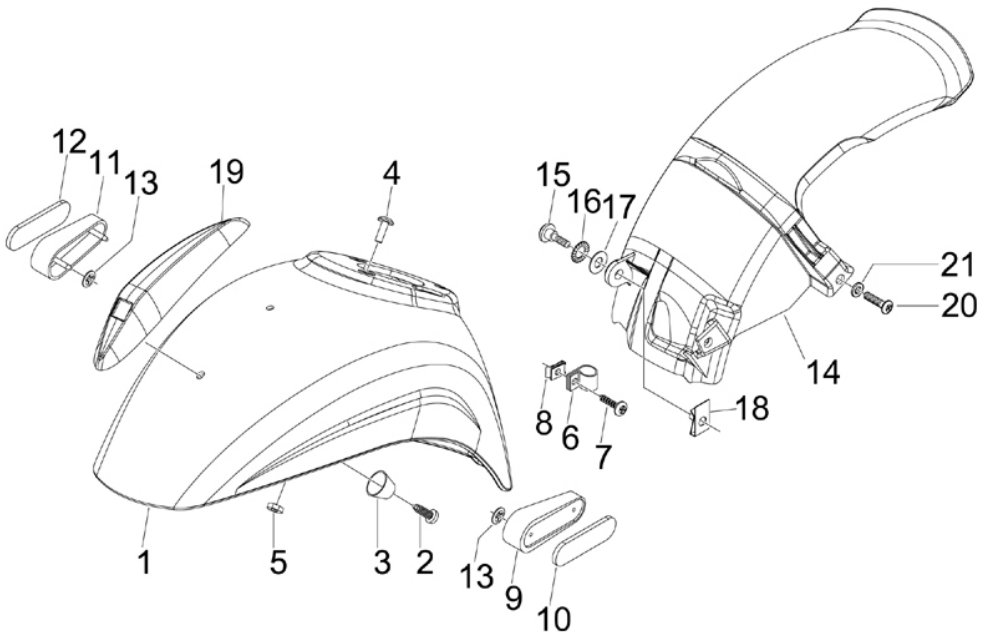


| Pos. | Code | Description | Qty | Variants |
|---|---|---|---|---|
| 12 | 584084 | Right lateral retroreflector | 1 | |
| 13 | 181351 | Spring plate | 4 | |
| 14 | 674887 | Rear mudguard | 1 | |
| 15 | 015804 | screw | 1 | |
| 16 | 012533 | Notched washer 6,6x11x0 | 1 | |
| 17 | 013880 | Flat washer 16x6,5x1,5 | 1 | |
| 18 | 254485 | Spring plate M6 | 2 | |
| 19 | 675525 | Mudguard crest | 1 | |
| 19 | 599677 | Mudguard crest | 1 | |
| 20 | 575249 | Metric screw TBC | 1 | |
| 21 | 709047 | Spring washer | 1 | |

| | |
|---|---|
| **Group** | Frame - Plastic parts - Coachwork |
| **Code** | 02.34 |
| **Description** | Helmet huosing - Undersaddle |
| **Service** | 1 |

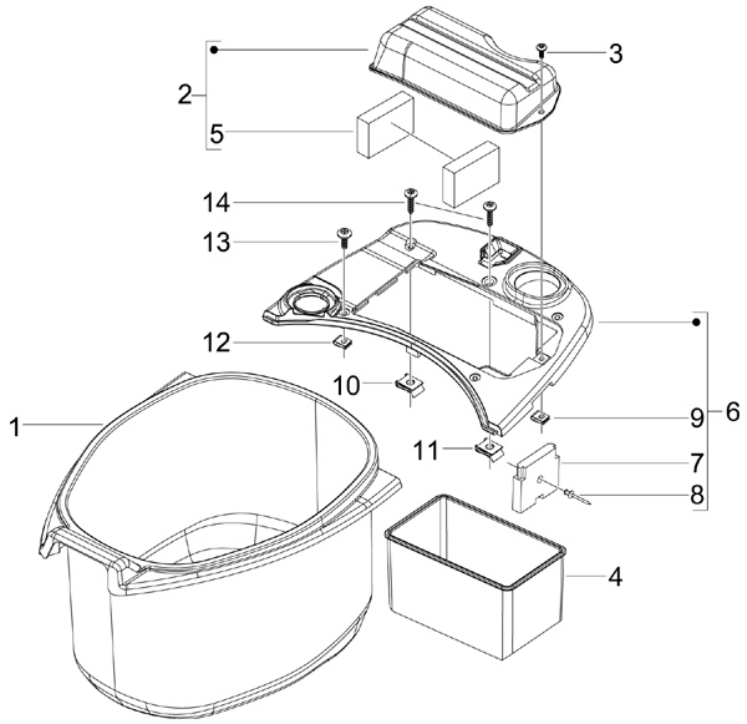


| Pos. | Code | Description | Qty | Variants |
|---|---|---|---|---|
| 1 | 675266 | Helmet compartment | 1 | |
| 2 | 576017 | Complete battery cover | 1 | |
| 3 | 259349 | Screw M4,2x13 | 1 | |
| 4 | 299047 | Float chamber | 1 | |
| 5 | 583310 | Pad | 2 | |
| 6 | 656303 | Complete battery tank cover | 1 | |
| 7 | 290405 | Bracket | 1 | |
| 8 | 182302 | Rivet | 1 | |
| 9 | CM017410 | Spring plate | 1 | |
| 10 | CM017408 | Plate | 2 | |
| 11 | CM017410 | Spring plate | 2 | |
| 12 | 254485 | Spring plate M6 | 1 | |
| 13 | 271891 | Screw m6x30 | 1 | |
| 13 | CM179303 | Screw metrica | 1 | |
| 14 | CM178608 | Self tapping screw | 3 | |

| | |
|---|---|
| **Group** | Frame - Plastic parts - Coachwork |
| **Code** | 02.37 |
| **Description** | Rear cover - Splash guard |
| **Service** | 1 |

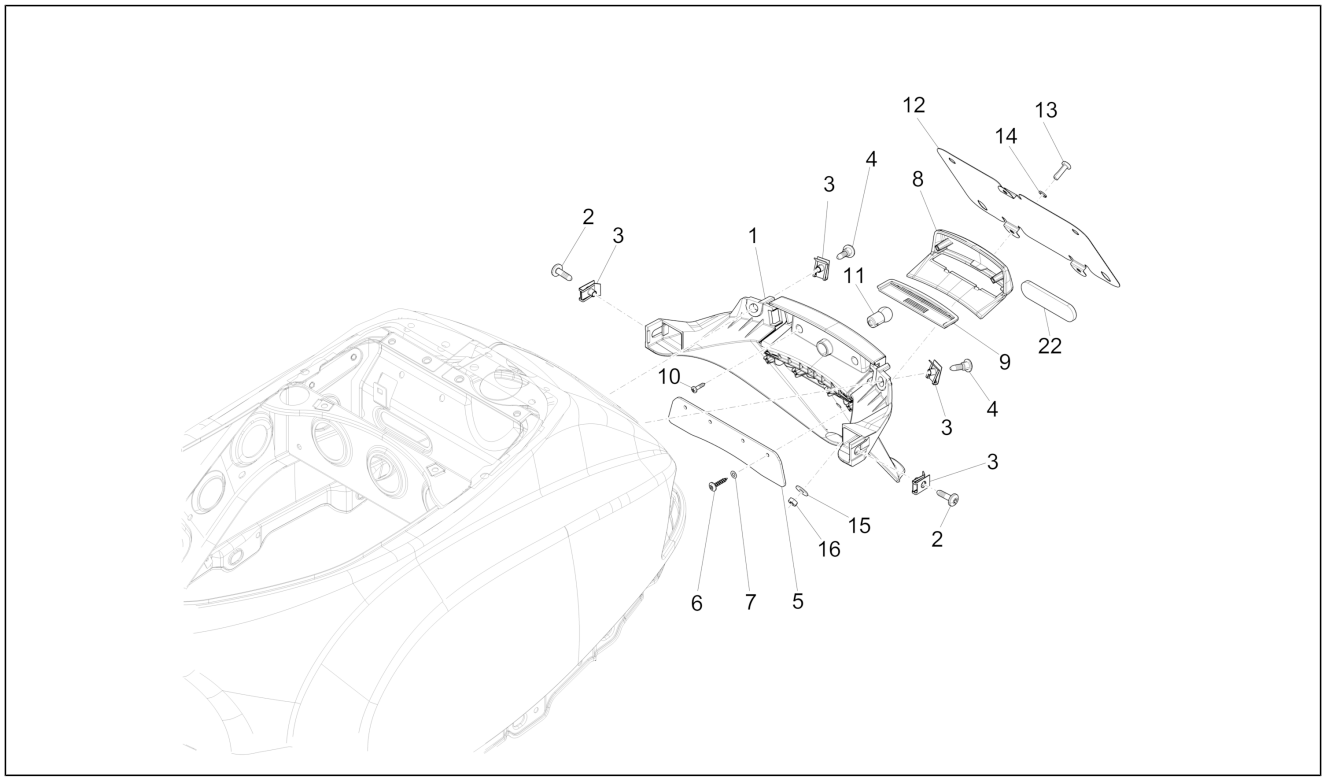


| Pos. | Code | Description | Qty | Variants |
|---|---|---|---|---|
| 1 | 65426100DI | Rear protection | 1 | **Colour:**Pastel blue[244/A]<br>**Colour:**Pastel blue[244/A] |
| 1 | 6542610090 | Rear protection | 1 | **Colour:**Shiny Black[94]<br>**Colour:**Shiny Black[94]<br>**Colour:**Shiny Black[94]<br>**Colour:**Shiny Black[94] |
| 1 | 65426100NL | Rear protection | 1 | **Colour:**Semi glossy black[85/B]<br>**Colour:**Semi glossy black[85/B] |
| 1 | 65426100AH | Rear protection | 1 | **Colour:**White/Blue College[544 - 231/A] |
| 1 | 65426100BR | Rear protection | 1 | **Colour:**White[544]<br>**Colour:**White[544]<br>**Colour:**White[544]<br>**Colour:**White[544] |
| 1 | 654261 | Rear protection | 1 | |
| 1 | 65426100AI | Rear protection | 1 | **Colour:**Mizar Orange[938/A] |
| 1 | 65426100R7 | Rear protection | 1 | **Colour:**White/Red College[544 - 894]<br>**Colour:**DRAGON RED[894]<br>**Colour:**DRAGON RED[894]<br>**Colour:**White/Red College[544 - 894]<br>**Colour:**DRAGON RED[894]<br>**Colour:**DRAGON RED[894] |
| 2 | CM179302 | Metric screw TBC | 2 | |
| 2 | 259830 | Metric screw M6x20 | 2 | |
| 3 | 254485 | Spring plate M6 | 4 | |
| 4 | CM179201 | Metric screw M6x22 | 2 | |
| 4 | 575249 | Metric screw TBC | 2 | |
| 5 | 623420 | Splash guard | 1 | |
| 6 | 297498 | Self tapping screw | 4 | |
| 7 | 013763 | Flat washer 4,2x12x1 | 4 | |
| 8 | 65426200AI | License plate light cover | 1 | **Colour:**Mizar Orange[938/A] |
| 8 | 65426200BR | License plate light cover | 1 | **Colour:**White[544]<br>**Colour:**White[544] |

| | |
|---|---|
| **Group** | Frame - Plastic parts - Coachwork |
| **Code** | 02.37 |
| **Description** | Rear cover - Splash guard |
| **Service** | 1 |

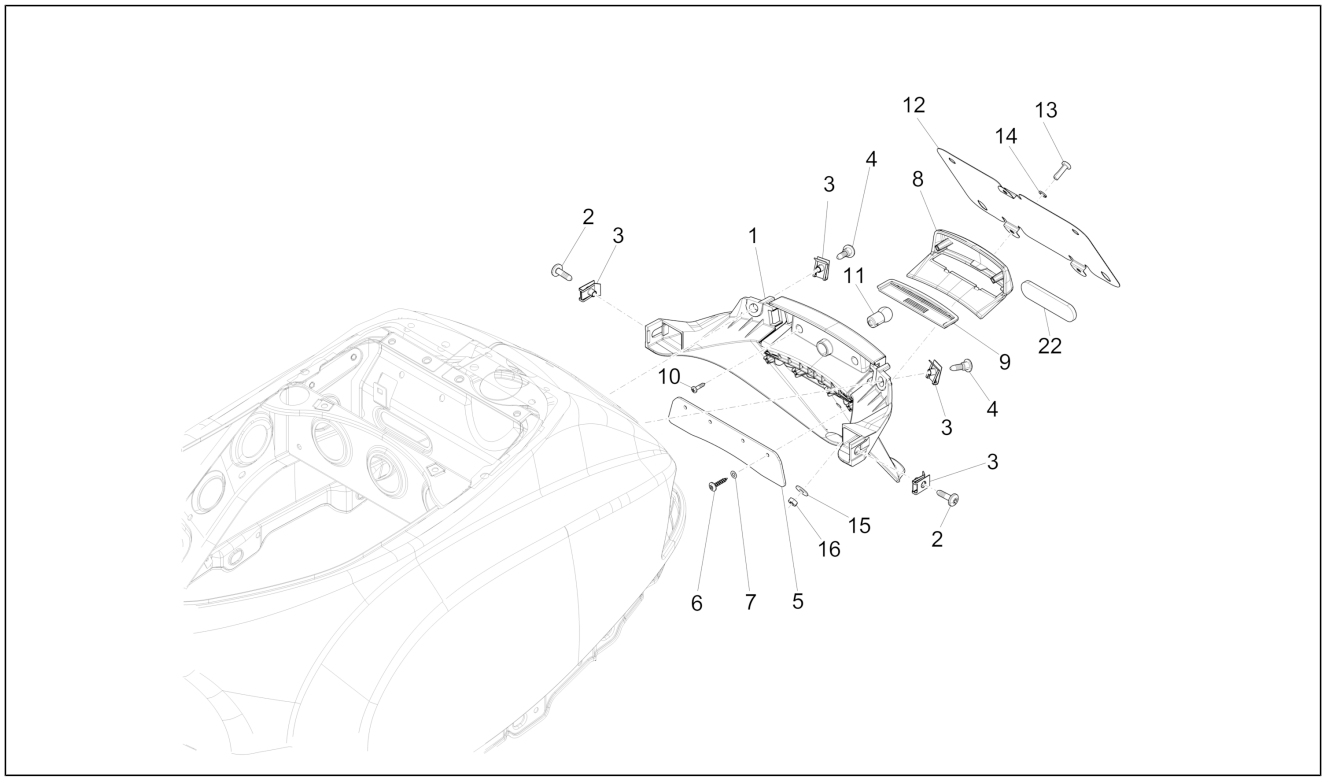


| Pos. | Code | Description | Qty | Variants |
|---|---|---|---|---|
| | | | | **Colour:**White[544]<br>**Colour:**White[544] |
| 8 | 654262 | License plate light cover | 1 | |
| 8 | 65426200NL | License plate light cover | 1 | **Colour:**Semi glossy black[85/B]<br>**Colour:**Semi glossy black[85/B] |
| 8 | 65426200R7 | License plate light cover | 1 | **Colour:**White/Red College[544 - 894]<br>**Colour:**DRAGON RED[894]<br>**Colour:**DRAGON RED[894]<br>**Colour:**White/Red College[544 - 894]<br>**Colour:**DRAGON RED[894]<br>**Colour:**DRAGON RED[894] |
| 8 | 6542620090 | License plate light cover | 1 | **Colour:**Shiny Black[94]<br>**Colour:**Shiny Black[94]<br>**Colour:**Shiny Black[94]<br>**Colour:**Shiny Black[94] |
| 8 | 65426200AH | License plate light cover | 1 | **Colour:**White/Blue College[544 - 231/A] |
| 8 | 65426200DI | License plate light cover | 1 | **Colour:**Pastel blue[244/A]<br>**Colour:**Pastel blue[244/A] |
| 9 | 639335 | License plate light glass | 1 | |
| 10 | 294678 | Self tapping screw 3.5x16 | 2 | |
| 10 | 008372 | Screw d3,5x13 | 2 | |
| 11 | 58233R | Rear retroreflector | 1 | |
| 12 | 582691 | License plate | 1 | |
| 13 | 015996 | Screw M4x12 | 3 | |
| 14 | 013763 | Flat washer 4,2x12x1 | 3 | |
| 15 | 016404 | Flat washer 4,2x7,6x0,9 | 3 | |
| 16 | 020104 | Nut M4 | 3 | |
| 22 | 292022 | Lamp 12V-5W | 1 | |

| | |
|---|---|
| **Group** | Frame - Plastic parts - Coachwork |
| **Code** | 02.38 |
| **Description** | Plates - Emblems |
| **Service** | 1 |

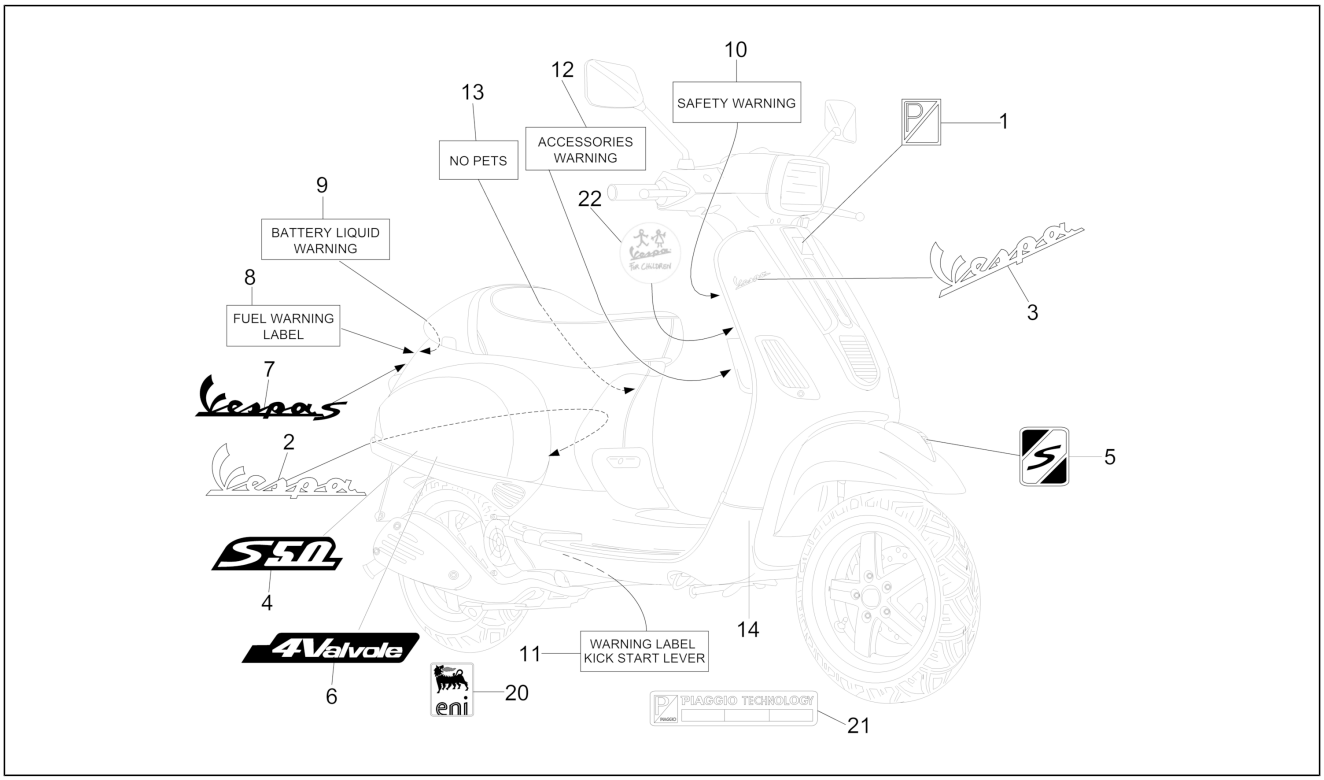


| Pos. | Code | Description | Qty | Variants |
|---|---|---|---|---|
| 1 | 576464 | Shield "Piaggio" | 1 | |
| 2 | 656220 | """Vespa"" lateral label" | 1 | |
| 3 | 656219 | """Vespa"" front label" | 1 | |
| 4 | 656229 | Name plate "S50" | 1 | |
| 5 | 654821 | """S"" mudguard label" | 1 | |
| 6 | 656230 | Name plate "4 Valvole" | 1 | |
| 7 | 656228 | Name plate "Vespa S" | 1 | |
| 8 | 576705 | Fuel warning plate | 1 | |
| 9 | 576702 | Battery decal | 1 | |
| 10 | 576704 | "Safety" plate | 1 | |
| 11 | 576707 | "Kick starter" plate | 1 | |
| 12 | 576708 | Accessories sticker | 1 | |
| 13 | 576953 | Name plate "No pets" | 1 | |
| 14 | 65759000A1 | College vespa piston rings kit | 1 | **Colour:**White/Red College[544 - 894]<br>**Colour:**White/Red College[544 - 894] |
| 14 | 65759000A2 | College vespa piston rings kit | 1 | **Colour:**White/Blue College[544 - 231/A] |
| 20 | 895839 | """Eni"" label" | 2 | |
| 21 | 672200 | Name plate "Piaggio Technology" | 1 | |
| 22 | 1B001078 | Name plate "Vespa For children" | 1 | |

| | |
|---|---|
| **Group** | Frame - Plastic parts - Coachwork |
| **Code** | 02.39 |
| **Description** | Saddle/seats |
| **Service** | 1 |

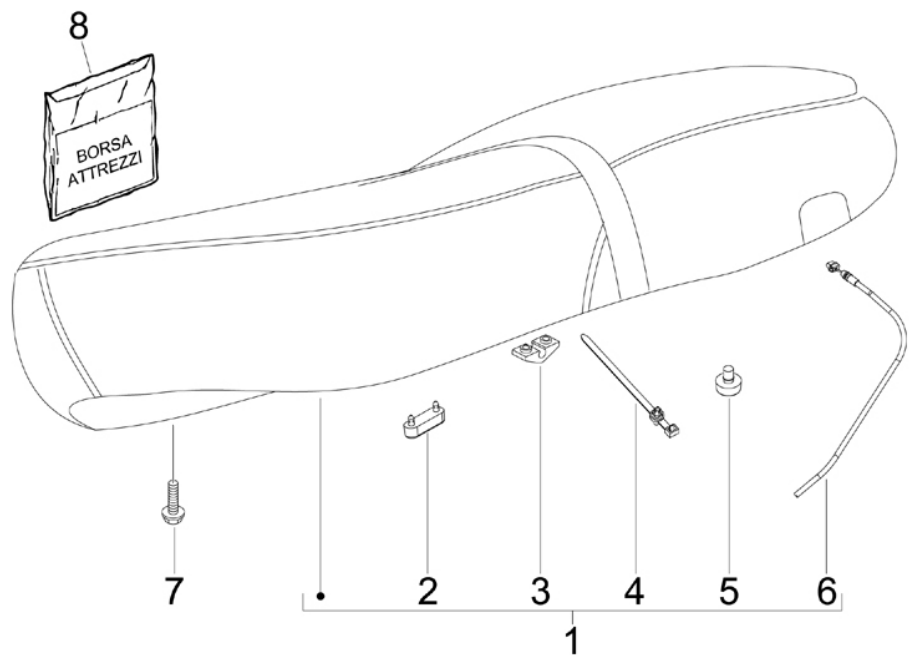


| Pos. | Code | Description | Qty | Variants |
|---|---|---|---|---|
| 1 | 65429300AI | granturismo saddle with belt | 1 | **Colour:**Mizar Orange[938/A] |
| 1 | 65429300AN | granturismo saddle with belt | 1 | **Colour:**Shiny Black[94]<br>**Colour:**Shiny Black[94]<br>**Colour:**White[544]<br>**Colour:**White[544]<br>**Colour:**Pastel blue[244/A]<br>**Colour:**DRAGON RED[894]<br>**Colour:**DRAGON RED[894]<br>**Colour:**White[544]<br>**Colour:**DRAGON RED[894]<br>**Colour:**Shiny Black[94]<br>**Colour:**Pastel blue[244/A]<br>**Colour:**DRAGON RED[894]<br>**Colour:**White[544]<br>**Colour:**Shiny Black[94] |
| 1 | 65429300C1 | granturismo saddle with belt | 1 | **Colour:**White/Red College[544 - 894]<br>**Colour:**White/Red College[544 - 894] |
| 1 | 65429300C2 | granturismo saddle with belt | 1 | **Colour:**White/Blue College[544 - 231/A] |
| 1 | 67327600C1 | Saddle assembly | 1 | **Colour:**Semi glossy black[85/B]<br>**Colour:**Semi glossy black[85/B] |
| 2 | 296456 | Stop buffer | 2 | |
| 3 | 296743 | Bracket | 2 | |
| 4 | 298729 | Hose clamp | 1 | |
| 5 | 577492 | Pad | 2 | |
| 6 | 653994 | Saddle opening transmission kit | 1 | |
| 7 | B016426 | Screw w/ flange M6x14 | 2 | |
| 8 | 650540 | Complete tools bag | 1 | |

| | |
|---|---|
| **Group** | Frame - Plastic parts - Coachwork |
| **Code** | 02.45 |
| **Description** | Driving mirror/s |
| **Service** | 1 |

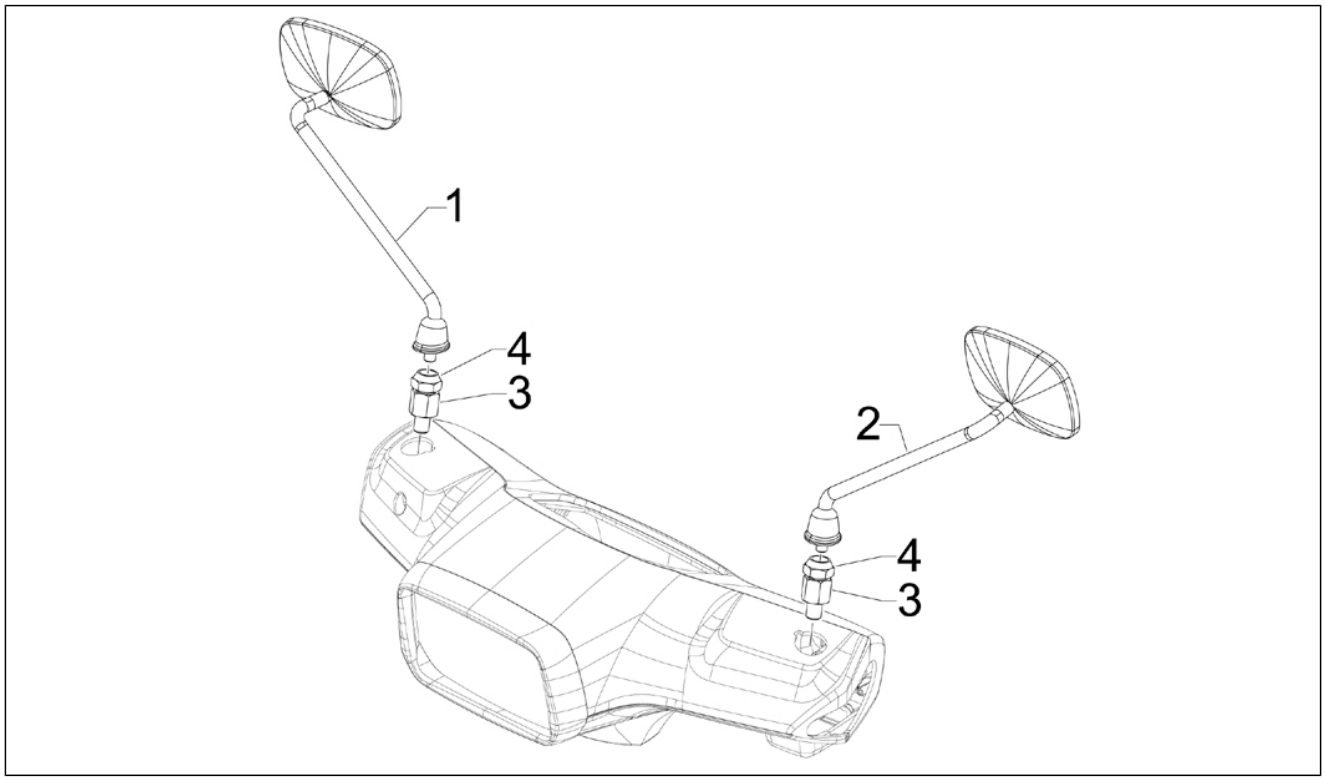


| Pos. | Code | Description | Qty | Variants |
|---|---|---|---|---|
| 1 | CM178902 | RH rearview mirror | 1 | |
| 2 | CM178901 | LH rearview mirror | 1 | |
| 3 | 655115 | Mirror support | 1 | |
| 4 | 654149 | Nut | 1 | |

| | |
|---|---|
| **Group** | Frame - Plastic parts - Coachwork |
| **Code** | 02.46 |
| **Description** | Locks |
| **Service** | 1 |

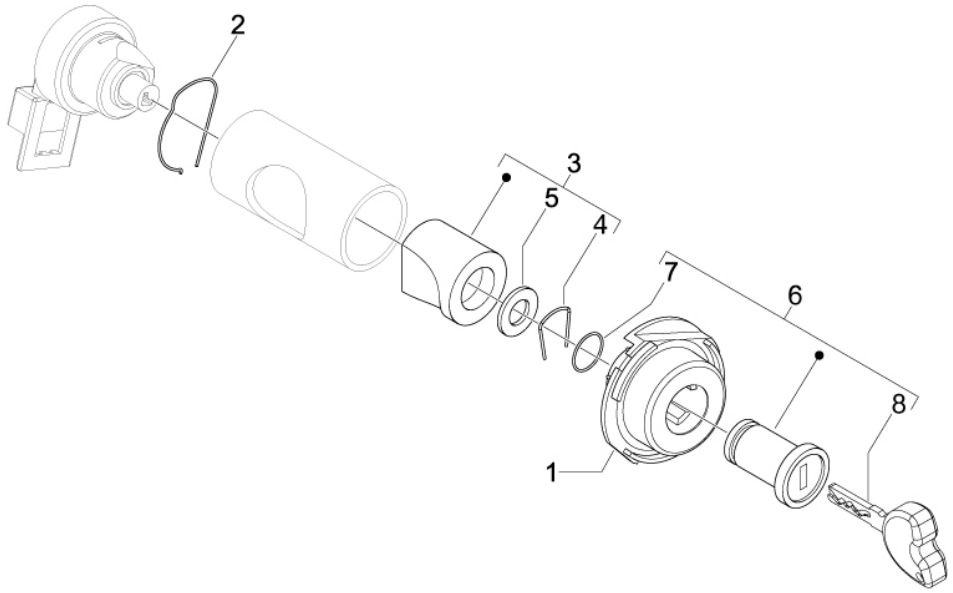


| Pos. | Code | Description | Qty | Variants |
|---|---|---|---|---|
| 1 | 298581 | Lock body | 1 | |
| 2 | 253937 | Spring | 1 | |
| 3 | 298903 | Complete lock block | 1 | |
| 4 | 298838 | Cylinder retainer spring | 1 | |
| 5 | 298594 | Flat washer | 1 | |
| 6 | 573905 | Cylinder set | 1 | |
| 7 | 298731 | Gasket ring | 1 | |
| 8 | 573960 | Key blank | 1 | |

| | |
|---|---|
| **Group** | Frame - Plastic parts - Coachwork |
| **Code** | 02.47 |
| **Description** | Fuel tank |
| **Service** | 1 |

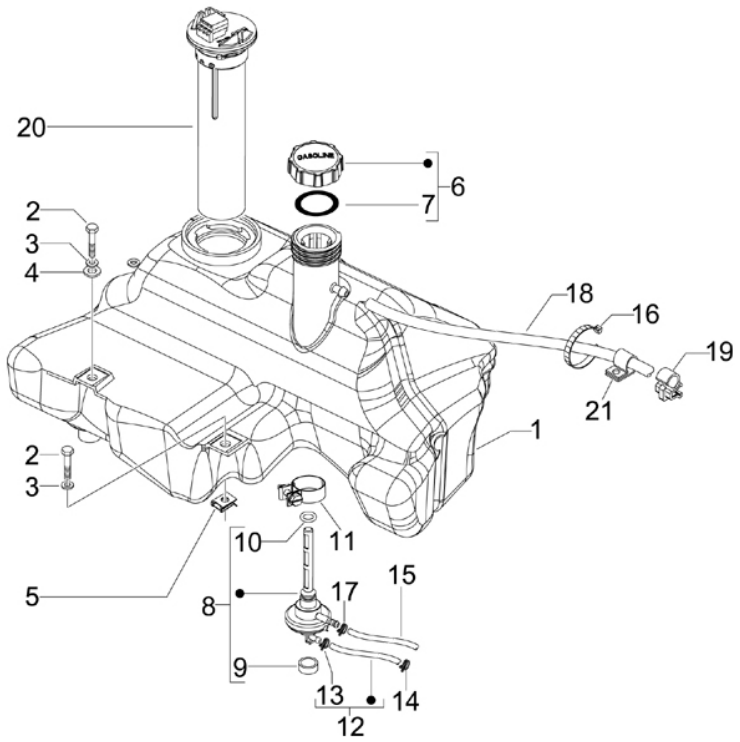


| Pos. | Code | Description | Qty | Variants |
|---|---|---|---|---|
| 1 | 653005 | Fuel tank | 1 | |
| 2 | 018639 | Hex screw M6x20 | 3 | |
| 3 | 016406 | Spring washer 6,4x11,8x1 | 3 | |
| 4 | 013880 | Flat washer 16x6,5x1,5 | 1 | |
| 5 | 254485 | Spring plate M6 | 3 | |
| 6 | 656022 | Plug | 1 | |
| 7 | 656021 | Tank cover gasket | 1 | |
| 8 | 575321 | Depression tap | 1 | |
| 9 | 090958 | Cover | 1 | |
| 10 | 196868 | Gasket | 1 | |
| 11 | 577557 | Hose clamp | 1 | |
| 12 | 624933 | Complete vacuum pipe | 1 | |
| 13 | CM001912 | Hose clamp | 2 | |
| 14 | CM002901 | Hose clamp | 1 | |
| 15 | CM027916 | pipe 3,25x8x420 | 1 | |
| 16 | 145298 | Lock-strap L=180mm | 1 | |
| 17 | CM001901 | Hose clamp | 1 | |
| 18 | CM001209 | pipe | 1 | |
| 19 | CM013202 | Pipes/cables retainer spring | 1 | |
| 20 | CM025702 | Level gauge | 1 | |
| 21 | 847778 | Hose clamp | 1 | |

| | |
|---|---|
| **Group** | Handlebars/Steering |
| **Code** | 03.01 |
| **Description** | Handlebars coverages |
| **Service** | 1 |

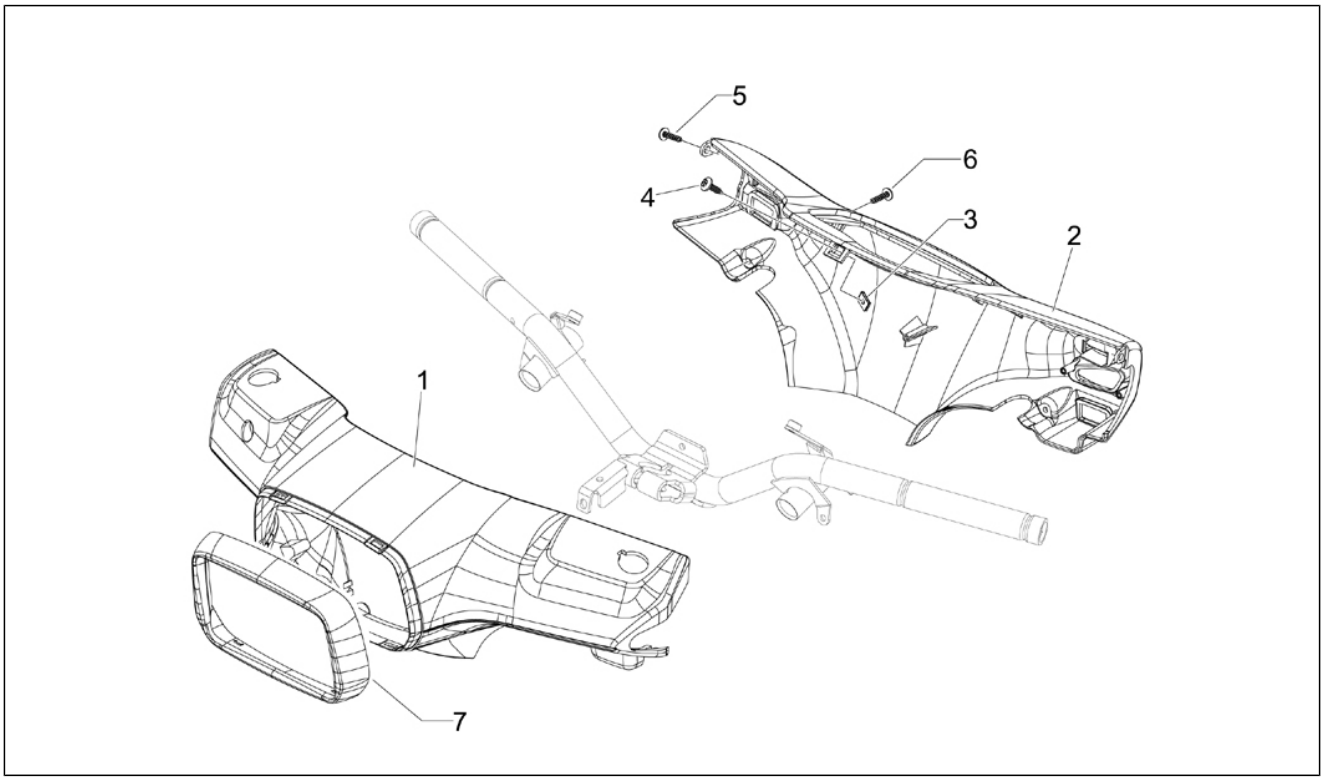


| Pos. | Code | Description | Qty | Variants |
|---|---|---|---|---|
| 1 | 65426300NL | Front handlebar cover | 1 | **Colour:**Semi glossy black[85/B]<br>**Colour:**Semi glossy black[85/B] |
| 1 | 65426300BR | Front handlebars cover | 1 | **Colour:**White/Blue College[544 - 231/A]<br>**Colour:**White[544]<br>**Colour:**White/Red College[544 - 894]<br>**Colour:**White[544]<br>**Colour:**White/Red College[544 - 894]<br>**Colour:**White[544]<br>**Colour:**White[544] |
| 1 | 6542630090 | Front handlebar cover | 1 | **Colour:**Shiny Black[94]<br>**Colour:**Shiny Black[94]<br>**Colour:**Shiny Black[94]<br>**Colour:**Shiny Black[94] |
| 1 | 65426300DI | Front handlebar cover | 1 | **Colour:**Pastel blue[244/A]<br>**Colour:**Pastel blue[244/A] |
| 1 | 65426300AI | Front handlebars cover | 1 | **Colour:**Mizar Orange[938/A] |
| 1 | 654263 | Front handlebars cover | 1 | |
| 1 | 65426300R7 | Front handlebars cover | 1 | **Colour:**DRAGON RED[894]<br>**Colour:**DRAGON RED[894]<br>**Colour:**DRAGON RED[894]<br>**Colour:**DRAGON RED[894] |
| 2 | 6542640090 | Handlebar rear cover | 1 | **Colour:**Shiny Black[94]<br>**Colour:**Shiny Black[94]<br>**Colour:**Shiny Black[94]<br>**Colour:**Shiny Black[94] |
| 2 | 65426400NL | Handlebar rear cover | 1 | **Colour:**Semi glossy black[85/B]<br>**Colour:**Semi glossy black[85/B] |
| 2 | 65426400DI | Handlebar rear cover | 1 | **Colour:**Pastel blue[244/A]<br>**Colour:**Pastel blue[244/A] |
| 2 | 65426400AI | Handlebar rear cover | 1 | **Colour:**Mizar Orange[938/A] |
| 2 | 654264 | Handlebar rear cover | 1 | |
| 2 | 65426400AH | Handlebar rear cover | 1 | **Colour:**White/Blue College[544 - 231/A] |
| 2 | 65426400BR | Handlebar rear cover | 1 | **Colour:**White[544] |

| | |
|---|---|
| **Group** | Handlebars/Steering |
| **Code** | 03.01 |
| **Description** | Handlebars coverages |
| **Service** | 1 |

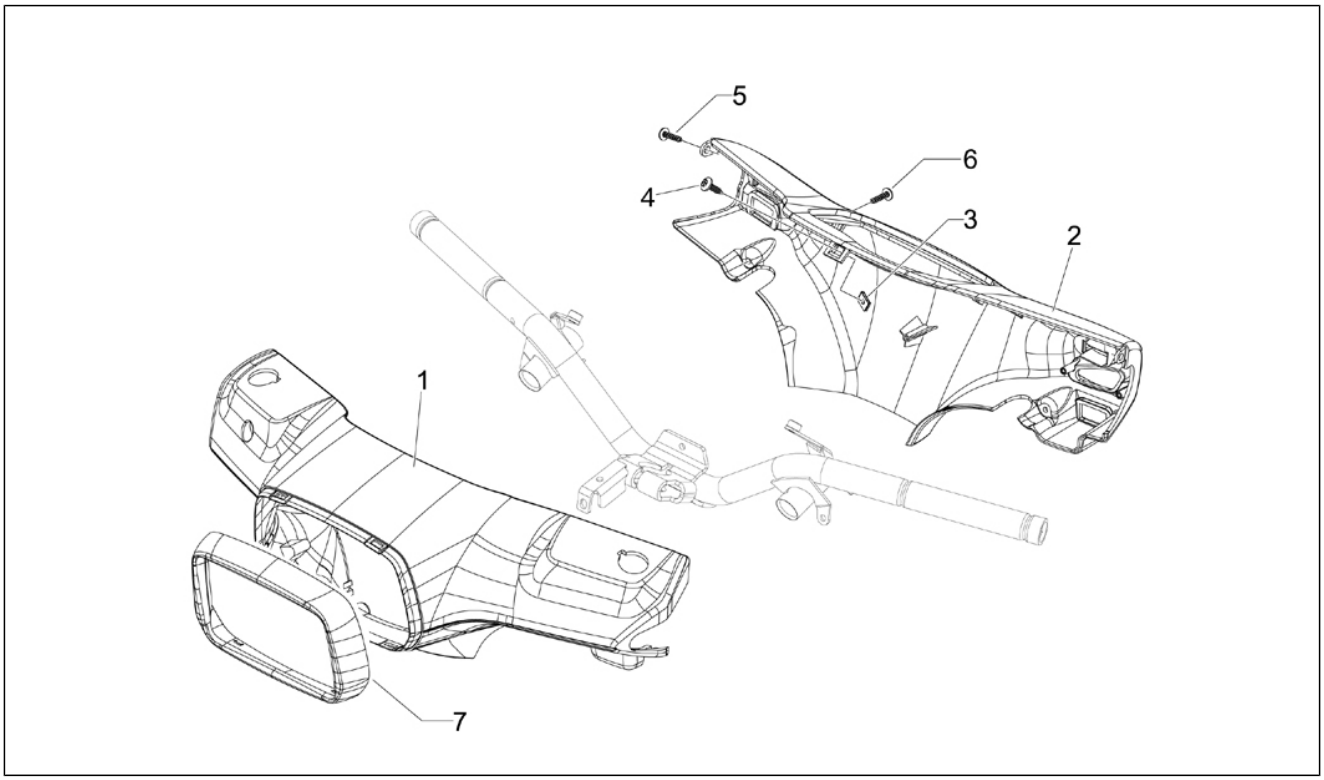


| Pos. | Code | Description | Qty | Variants |
|---|---|---|---|---|
| | | | | **Colour:**White[544]<br>**Colour:**White[544]<br>**Colour:**White[544] |
| 2 | 65426400R7 | Handlebar rear cover | 1 | **Colour:**White/Red College[544 - 894]<br>**Colour:**DRAGON RED[894]<br>**Colour:**DRAGON RED[894]<br>**Colour:**White/Red College[544 - 894]<br>**Colour:**DRAGON RED[894]<br>**Colour:**DRAGON RED[894] |
| 3 | CM017409 | Spring plate | 1 | |
| 4 | 008457 | Self-tap screw M4,2x19 | 1 | |
| 5 | 258146 | Self-tap screw M3x20 | 2 | |
| 6 | 270793 | TBCIC Screw | 3 | |
| 7 | 654265 | Headlight frame | 1 | |

| | |
|---|---|
| **Group** | Handlebars/Steering |
| **Code** | 03.02 |
| **Description** | Meter combination - Cruscotto |
| **Service** | 1 |

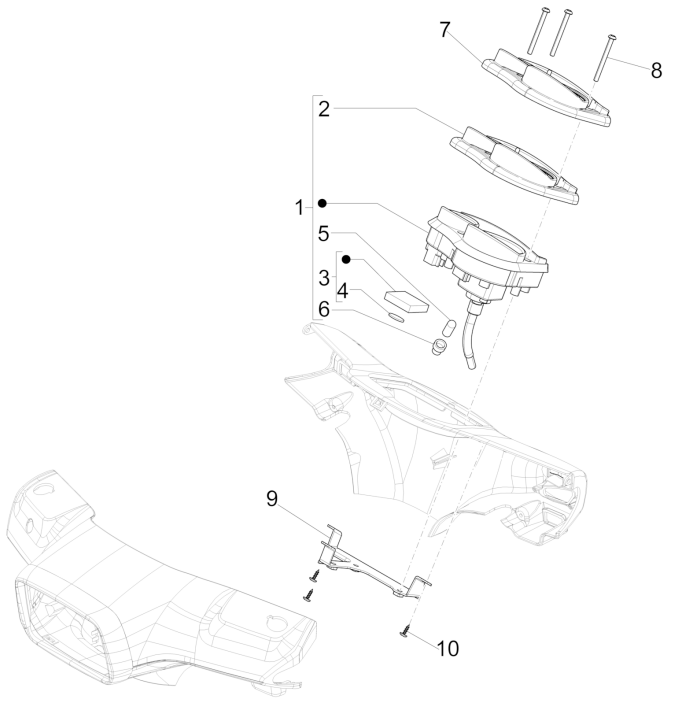


| Pos. | Code | Description | Qty | Variants |
|---|---|---|---|---|
| 1 | 641407 | Meter combination USA | 1 | |
| 1 | 640722 | Meter combination | 1 | |
| 2 | 680156 | Instrument panel cover | 1 | |
| 3 | AP8212406 | Digital clock | 1 | |
| 4 | 498342 | Battery for clock | 1 | |
| 5 | 164634 | 12v-1.2w bulb | 7 | |
| 5 | 229892 | Bulb 12v-2w | 1 | |
| 6 | 253366 | Lampholder, complete 12V-1,2W | 7 | |
| 7 | 675445 | Instrument frame | 1 | |
| 7 | 654279 | Instrument frame | 1 | |
| 8 | 654300 | Torx Screw | 3 | |
| 9 | 654298 | Fixing plate | 1 | |
| 10 | 297498 | Self tapping screw | 3 | |

| | |
|---|---|
| **Group** | Handlebars/Steering |
| **Code** | 03.06 |
| **Description** | Handlebars - Master cil. |
| **Service** | 1 |

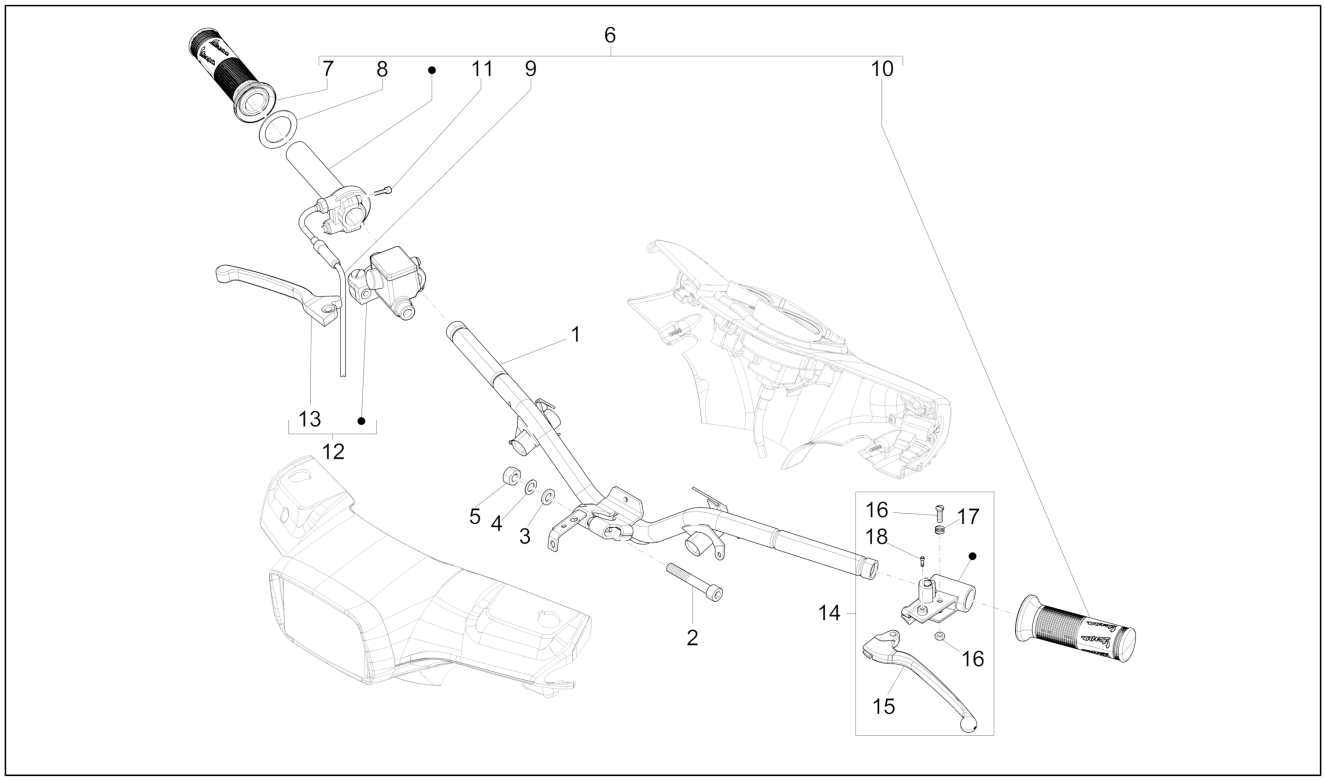


| Pos. | Code | Description | Qty | Variants |
|---|---|---|---|---|
| 1 | 6542675 | Handlebar | 1 | |
| 2 | 655554 | Hex socket screw | 1 | |
| 3 | 012543 | Flat elastic washer with internal toothing 17x10,3x2 | 1 | |
| 4 | 267917 | Flat washer 18x10,2x2,5 | 1 | |
| 5 | 015330 | Nut M10 | 1 | |
| 6 | CM060977 | Complete throttle control sleeve | 1 | |
| 6 | CM060982 | Throttle control sleeve assembly | 1 | |
| 7 | 274491 | RH hand grip | 1 | |
| 7 | CM083804 | Grip, r.h. | 1 | |
| 8 | 562923 | Ring 38,3x27x1,2 | 1 | |
| 9 | 650477 | Complete throttle control transmission | 1 | |
| 10 | CM083803 | Grip, l.h. | 1 | |
| 10 | 274489 | Grip, l.h. | 1 | |
| 11 | 123394 | Screw with bushing | 1 | |
| 12 | CM074904 | Front master cilinder | 1 | |
| 13 | 497042 | Brake lever | 1 | |
| 14 | CM063804 | Left hand grip with rear brake lever | 1 | |
| 15 | 564683 | Rear brake control lever | 1 | |
| 16 | 265249 | Screw with nut | 1 | |
| 17 | 267948 | Spring | 1 | |
| 18 | 123394 | Screw with bushing | 1 | |

| | |
|---|---|
| **Group** | Suspensions - Wheels |
| **Code** | 04.01 |
| **Description** | Swinging arm |
| **Service** | 1 |

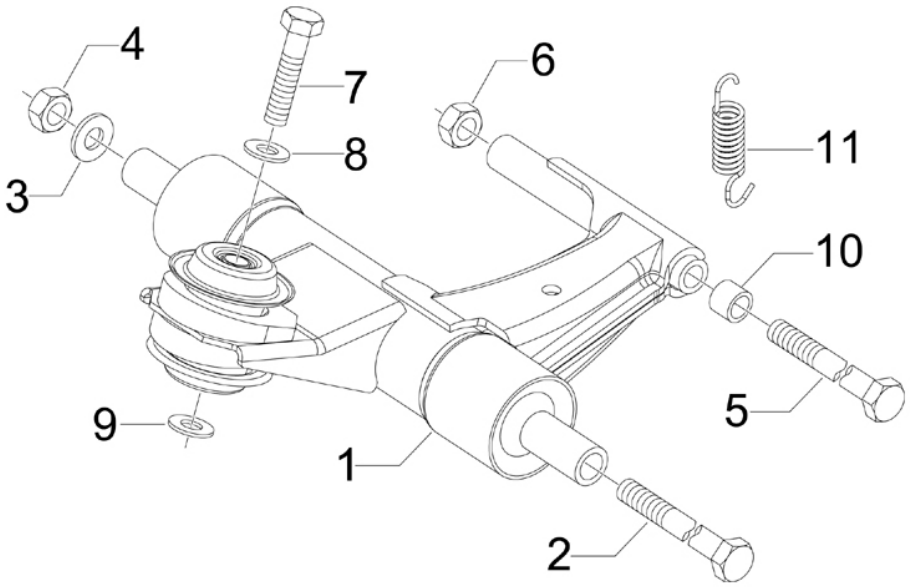


| Pos. | Code | Description | Qty | Variants |
|---|---|---|---|---|
| 1 | 56204R | Swinging arm | 1 | |
| 2 | 597914 | Hex socket screw M12x324 | 1 | |
| 3 | 709037 | Washer | 1 | |
| 4 | 261319 | Nut m12x1,25 h=12,5 | 1 | |
| 5 | 271779 | Hex socket screw M10x215 | 1 | |
| 6 | 002440 | Self locking nut M10 | 2 | |
| 7 | 560045 | Hex socket screw M10x80 | 1 | |
| 8 | 122781 | Washer | 1 | |
| 9 | 178790 | Flat washer | 1 | |
| 10 | 562310 | Spacer | 1 | |
| 11 | 563321 | Spring | 1 | |

| | |
|---|---|
| **Group** | Suspensions - Wheels |
| **Code** | 04.02 |
| **Description** | Fork/steering tube - Steering bearing unit |
| **Service** | 1 |

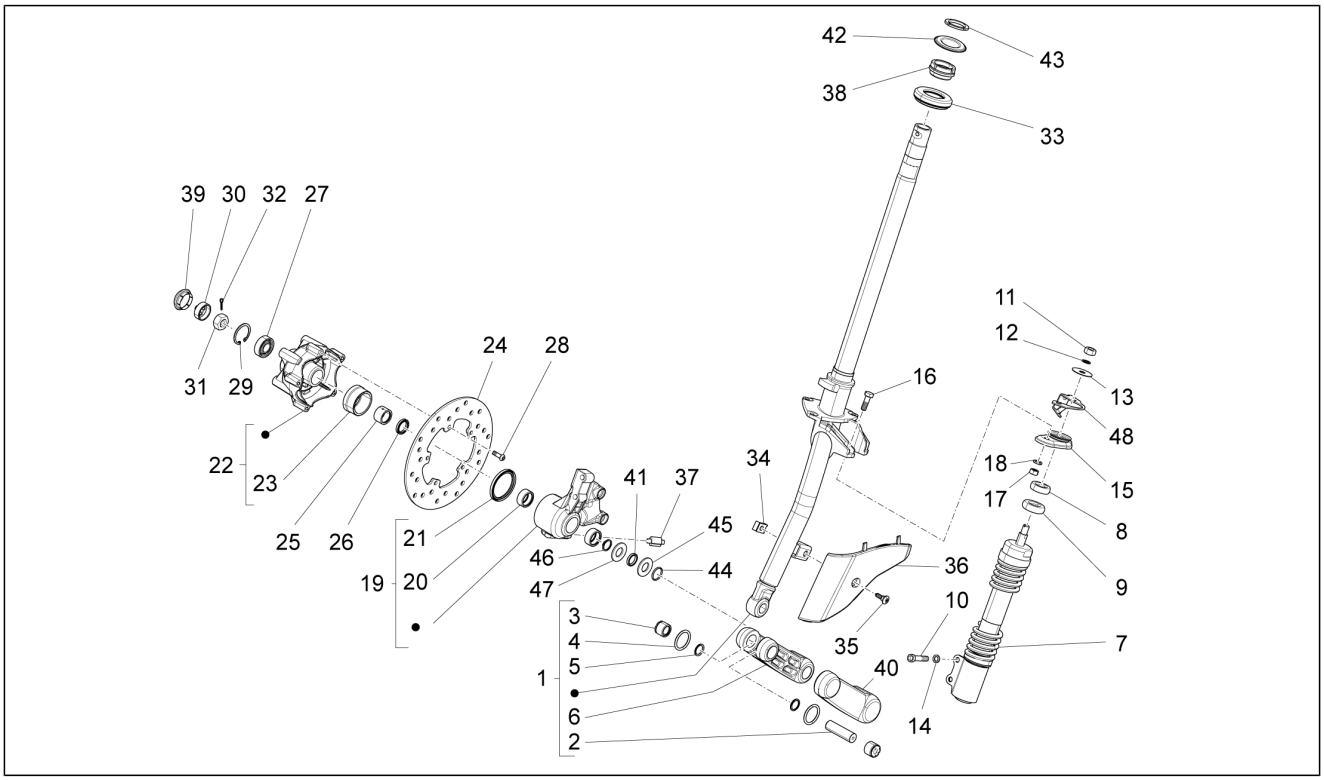


| Pos. | Code | Description | Qty | Variants |
|---|---|---|---|---|
| 1 | 6484135 | Steering tube complete with arm | 1 | |
| 2 | 177451 | Piston pin | 1 | |
| 3 | 198513 | Roller cage | 2 | |
| 4 | 006731 | Gasket | 2 | |
| 5 | 119219 | Gasket ring | 2 | |
| 6 | 6483975 | Left suspension arm | 1 | |
| 7 | 58581R | Complete front shock absorber | 1 | |
| 8 | 174085 | Pad | 1 | |
| 9 | 174874 | Pad | 1 | |
| 10 | 149104 | Hex socket screw M8x40 | 2 | |
| 11 | 021210 | Nut | 1 | |
| 12 | 174088 | Washer | 1 | |
| 13 | 012535 | Washer | 1 | |
| 14 | 709047 | Spring washer | 2 | |
| 15 | 601556 | Shock absorber connection bracket | 1 | |
| 15 | 273693 | Bracket | 1 | |
| 16 | 031120 | screw | 2 | |
| 17 | 020108 | Nut M8x6,5 | 2 | |
| 18 | 016408 | Spring washer 13,75x8,15x4,5 | 2 | |
| 19 | 5602865 | Not available | 1 | |
| 20 | 177436 | Drawn cap | 2 | |
| 21 | 177494 | Ring | 1 | |
| 22 | 560284 | Front wheel hub | 1 | |
| 23 | 267818 | Ring gear counts Km socket | 1 | |
| 24 | 56395R | Brake disc | 1 | |
| 25 | 177442 | Roller cage | 1 | |
| 26 | 177443 | Gasket ring | 1 | |
| 27 | 177610 | Bearing | 1 | |

| | |
|---|---|
| **Group** | Suspensions - Wheels |
| **Code** | 04.02 |
| **Description** | Fork/steering tube - Steering bearing unit |
| **Service** | 1 |

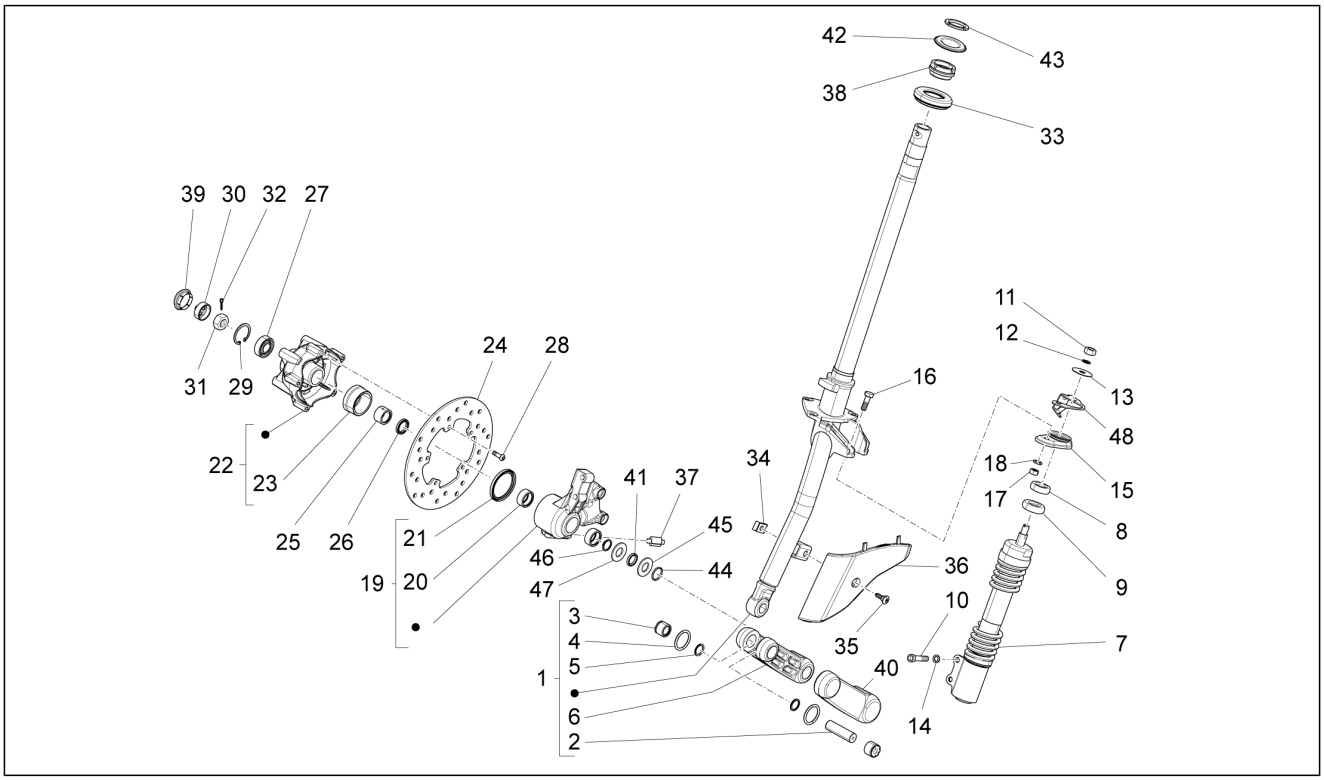


| Pos. | Code | Description | Qty | Variants |
|---|---|---|---|---|
| 28 | 667152 | Hex socket screw M6x20 | 5 | |
| 29 | 006635 | Snap ring | 1 | |
| 30 | 177609 | Cap | 1 | |
| 31 | 021114 | Nut | 1 | |
| 32 | 012789 | Split pin | 1 | |
| 33 | 6500754 | Lower steering bearing | 1 | |
| 34 | 254485 | Spring plate M6 | 1 | |
| 35 | CM179201 | Metric screw M6x22 | 1 | |
| 36 | 654268 | Suspension cover | 1 | |
| 37 | 267819 | Pinion | 1 | |
| 38 | 6506934 | Upper thrust ring | 1 | |
| 39 | 092517 | Axle plug | 1 | |
| 40 | 561433 | Front suspension arm cover | 1 | |
| 41 | 177521 | Ring | 1 | |
| 42 | 0037514 | Washer of the steering | 1 | |
| 43 | 0111094 | Steering tube ring nut | 1 | |
| 44 | 177408 | O-ring | 1 | |
| 45 | 177445 | Washer | 1 | |
| 46 | 006422 | Circlip | 1 | |
| 47 | 177414 | Washer | 1 | |
| 48 | 665701 | Brake pipe support bracket | 1 | |

| | |
|---|---|
| **Group** | Suspensions - Wheels |
| **Code** | 04.10 |
| **Description** | Rear suspension - Shock absorber/s |
| **Service** | 1 |

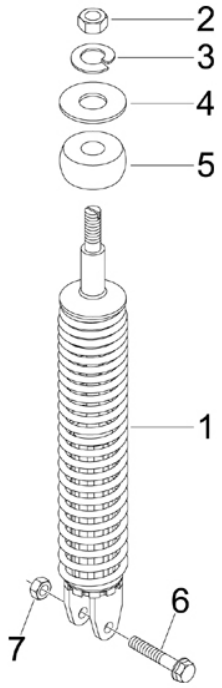


| Pos. | Code | Description | Qty | Variants |
|---|---|---|---|---|
| 1 | 668067 | Complete rear shock absorber | 1 | |
| 2 | 021108 | Nut M8 | 1 | |
| 3 | 016408 | Spring washer 13,75x8,15x4,5 | 1 | |
| 4 | 267038 | Flat washer | 1 | |
| 5 | 178150 | Upper buffer | 1 | |
| 6 | 268158 | Screw w/ flange M10 | 1 | |
| 7 | 002440 | Self locking nut M10 | 1 | |

| | |
|---|---|
| **Group** | Suspensions - Wheels |
| **Code** | 04.11 |
| **Description** | Front wheel |
| **Service** | 1 |

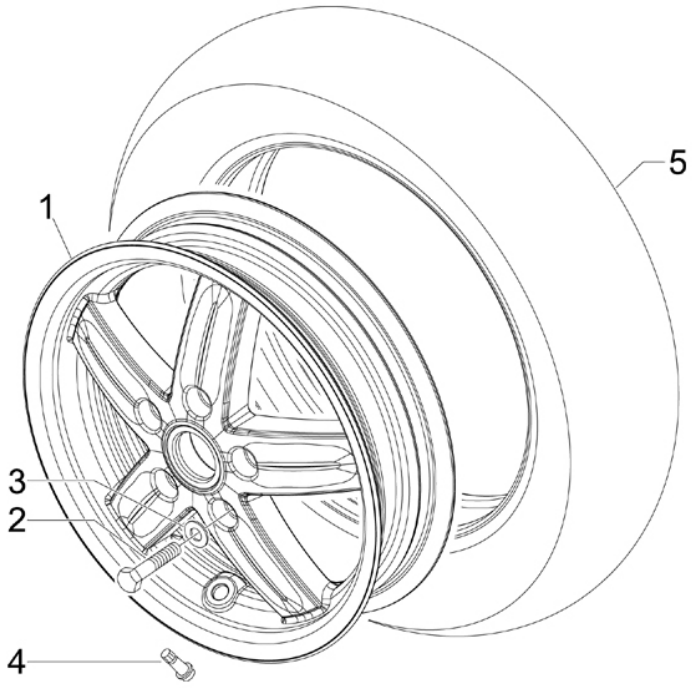


| Pos. | Code | Description | Qty | Variants |
|---|---|---|---|---|
| 1 | 58624R | 2.50x11 | 1 | |
| 1 | 58579R | | 1 | |
| 2 | 015792 | screw M8x30 | 5 | |
| 3 | 709047 | Spring washer | 5 | |
| 4 | 270991 | Tubeless tyre valve | 1 | |
| 5 | 668616 | Tyre 110/70 R11" Michelin | 1 | |

| | |
|---|---|
| **Group** | Suspensions - Wheels |
| **Code** | 04.12 |
| **Description** | Rear wheel |
| **Service** | 1 |

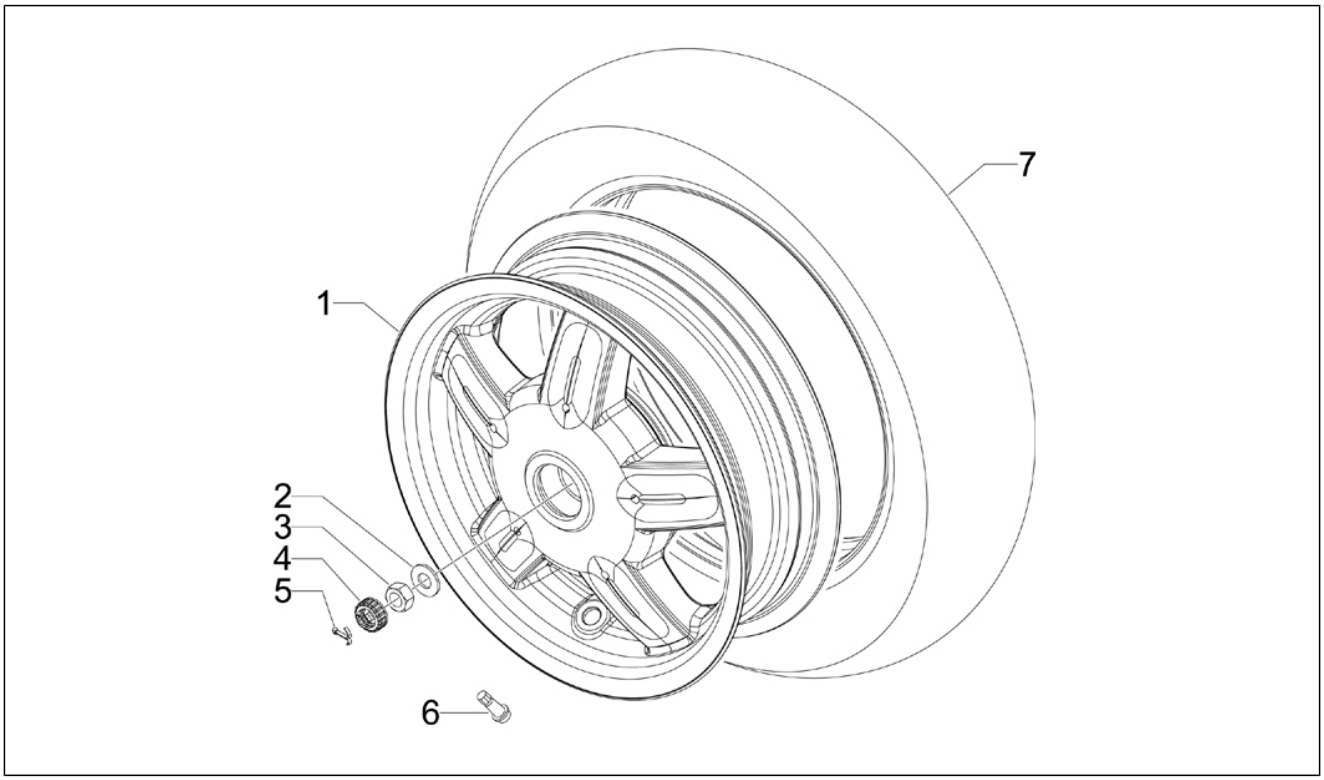


| Pos. | Code | Description | Qty | Variants |
|---|---|---|---|---|
| 1 | 56365R | Rear wheel | 1 | |
| 1 | 58580R | Rear wheel | 1 | |
| 1 | 58625R | Rear wheel 3x10" | 1 | |
| 2 | 273099 | Plain washer 34,8x16,2x3 | 1 | |
| 3 | 563728 | Nut M16x13 | 1 | |
| 4 | 194423 | Nut hold cap | 1 | |
| 5 | 012789 | Split pin | 1 | |
| 6 | 270991 | Tubeless tyre valve | 1 | |
| 7 | 668617 | (Michelin) Rear tyre 120/70-10" | 1 | |

| | |
|---|---|
| **Group** | Braking system - Transmissions |
| **Code** | 05.01 |
| **Description** | Brakes pipes - Calipers |
| **Service** | 1 |

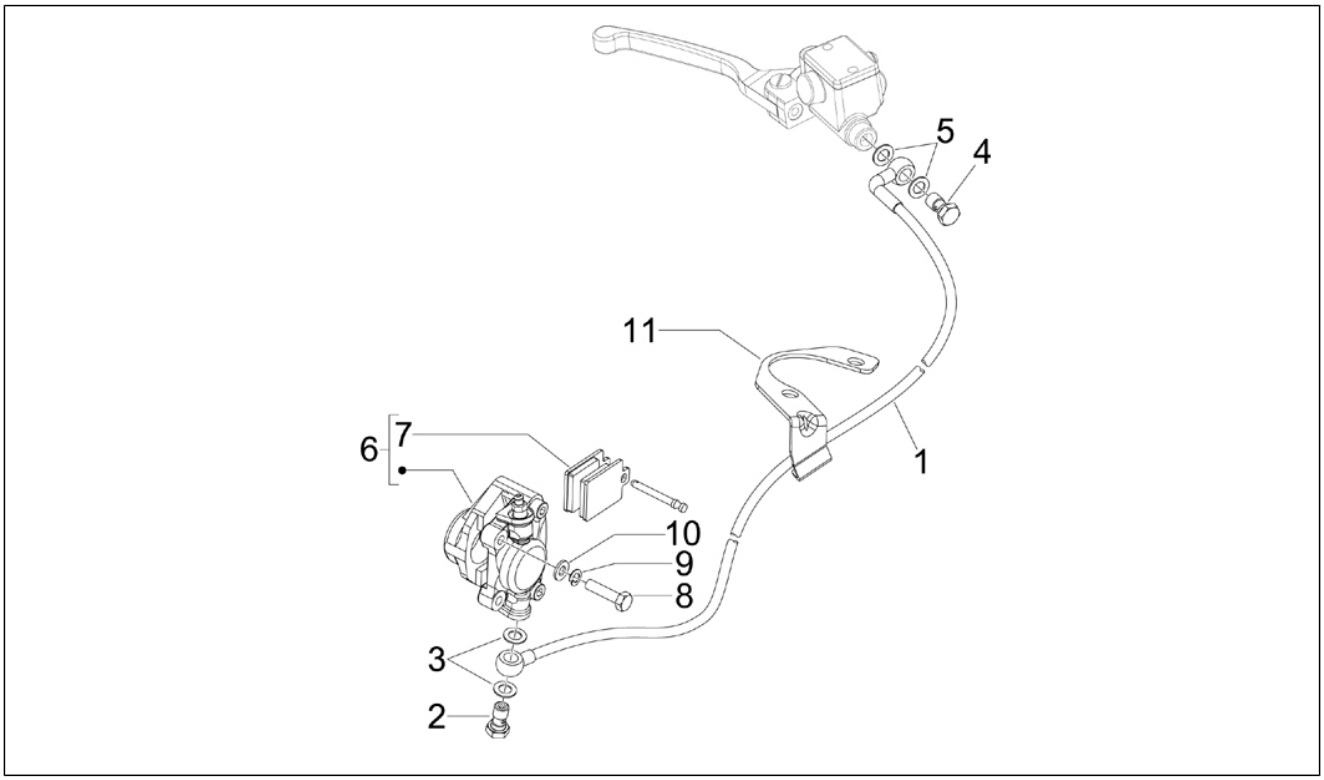


| Pos. | Code | Description | Qty | Variants |
|---|---|---|---|---|
| 1 | 649871 | Rear brake hydraulic piping | 1 | |
| 2 | 265451 | Oil pipe screw M10x18 | 1 | |
| 3 | 127927 | Gasket | 2 | |
| 4 | 265451 | Oil pipe screw M10x18 | 1 | |
| 5 | 127927 | Gasket | 2 | |
| 6 | CM065704 | Caliper (Heng Tong) | 1 | |
| 7 | 647073 | Brake pads kit (Heng-Tong) | 1 | |
| 8 | 597150 | screw | 2 | |
| 9 | 709047 | Spring washer | 2 | |
| 10 | 003058 | Flat washer 15x8,4x1,5 | 2 | |
| 11 | 665701 | Brake pipe support bracket | 1 | |

| | |
|---|---|
| **Group** | Braking system - Transmissions |
| **Code** | 05.03 |
| **Description** | Transmissions |
| **Service** | 1 |

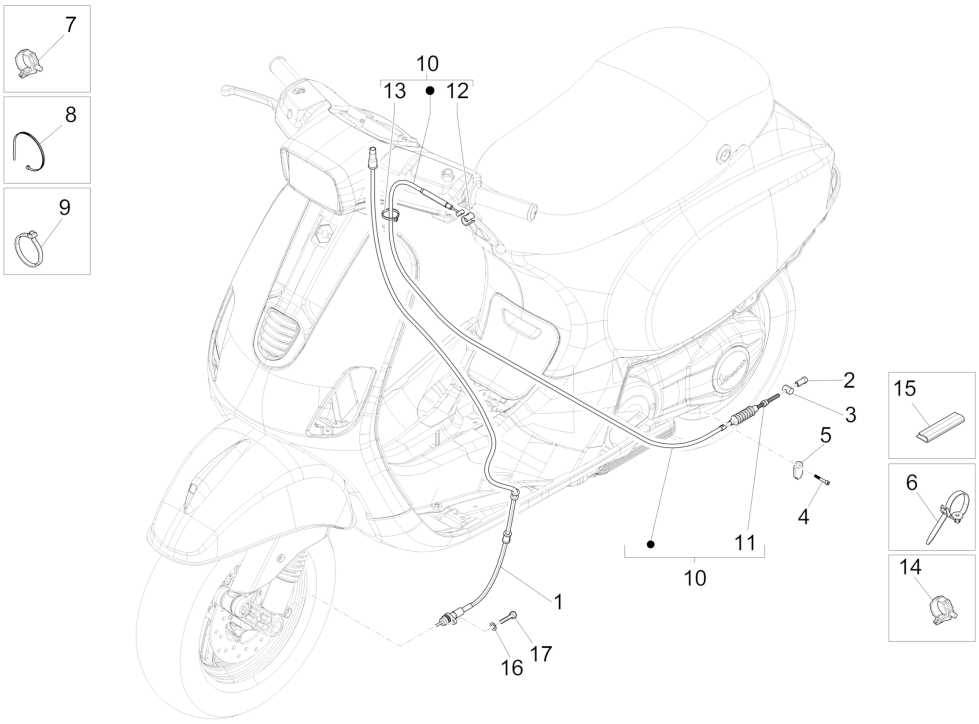


| Pos. | Code | Description | Qty | Variants |
|---|---|---|---|---|
| 1 | 650836 | Complete Transmission odometer | 1 | |
| 2 | 270310 | Registro freno posteriore | 1 | |
| 3 | 179640 | Adjuster pin | 1 | |
| 4 | 414837 | Screw w/ flange M6x25 | 1 | |
| 4 | B016774 | Screw w/ flange M6x25 | 1 | |
| 5 | 564497 | Plate | 1 | |
| 6 | 298729 | Hose clamp | 1 | |
| 7 | CM013202 | Pipes/cables retainer spring | 1 | |
| 8 | 257134 | Lock-strap L=277 | 2 | |
| 9 | 145298 | Lock-strap L=180mm | 2 | |
| 10 | 564217 | Rear brake lever complete transmission | 1 | |
| 10 | 665844 | Rear brake lever complete transmission | 1 | |
| 11 | 598918 | Registro freno posteriore | 1 | |
| 12 | 266040 | Bush | 1 | |
| 13 | 145298 | Lock-strap L=180mm | 1 | |
| 14 | CM006904 | Non return spring l=27 | 1 | |
| 15 | CM077701 | Guard 45 mm | 1 | |
| 16 | 006975 | Washer Ø5,3xØ10x0,5 | 1 | |
| 17 | 031058 | screw M5x16 | 1 | |

| | |
|---|---|
| **Group** | Electrical system |
| **Code** | 06.01 |
| **Description** | Selectors - Switches - Buttons |
| **Service** | 1 |

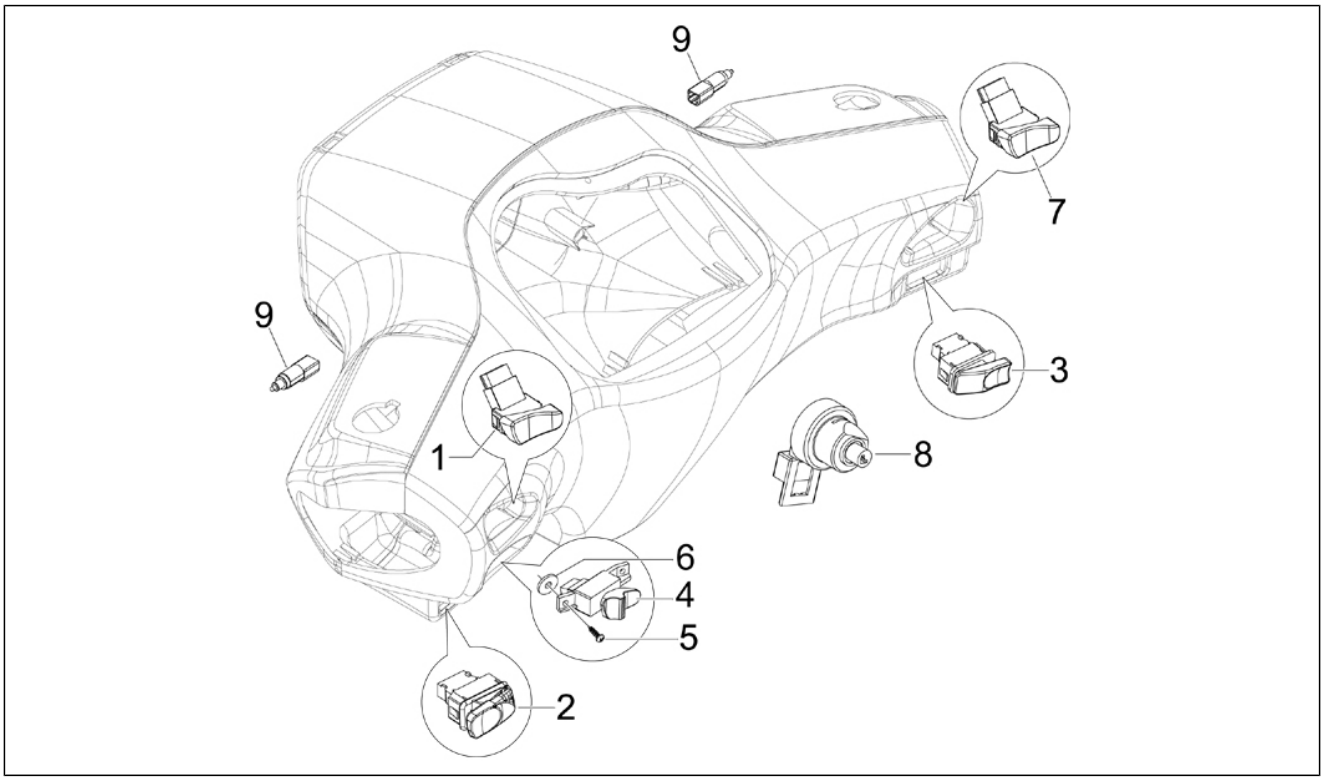


| Pos. | Code | Description | Qty | Variants |
|---|---|---|---|---|
| 1 | 294877 | Headlight selector | 1 | |
| 2 | 294723 | Turn signal lamps switch | 1 | |
| 3 | 641609 | Starter button | 1 | |
| 4 | 641743 | Horn button | 1 | |
| 5 | 270793 | TBCIC Screw | 2 | |
| 6 | 003054 | Washer 4,3x8x0,5 | 2 | |
| 7 | 584599 | Engine stop switch | 1 | |
| 8 | 643133 | Key switch | 1 | |
| 9 | 583575 | stop Button | 2 | |

| | |
|---|---|
| **Group** | Electrical system |
| **Code** | 06.03 |
| **Description** | Front headlamps - Turn signal lamps |
| **Service** | 1 |

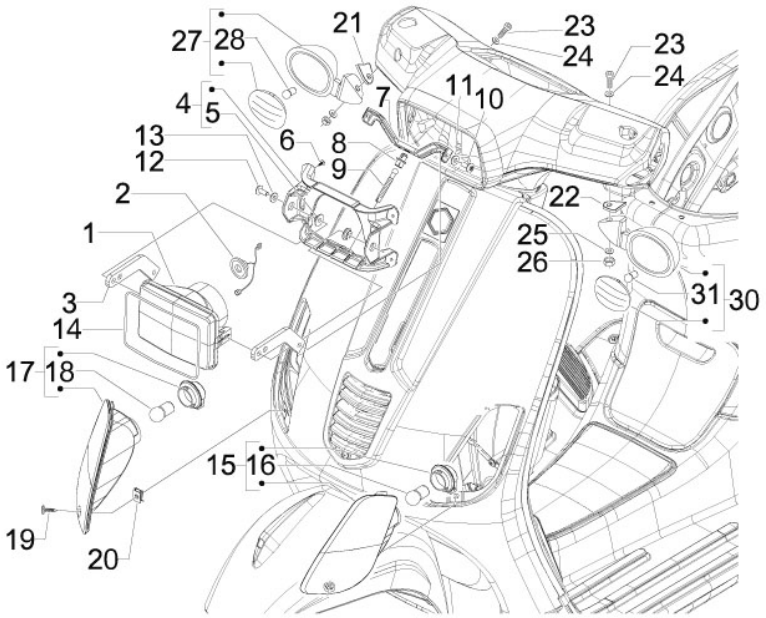


| Pos. | Code | Description | Qty | Variants |
|---|---|---|---|---|
| 1 | 641396 | Headlamp, assy | 1 | |
| 2 | 641397 | Headlamp cable harness | 1 | |
| 3 | 654271 | Headlight support clamp | 2 | |
| 4 | 6548904 | Complete headlight support | 1 | |
| 5 | 654301 | Headlight spacer | 2 | |
| 6 | 270793 | TBCIC Screw | 4 | |
| 7 | 654276 | Junction component | 1 | |
| 8 | 640800 | Adjuster block | 1 | |
| 9 | 640801 | Adjusting pin | 1 | |
| 10 | 015715 | Screw M5x16 | 2 | |
| 11 | 006976 | Spring washer 12x6,4x0,5 | 2 | |
| 12 | 018631 | screw M6x16 | 2 | |
| 13 | 006965 | Washer 5.3x10x10 | 2 | |
| 14 | 654876 | Gasket | 1 | |
| 15 | 639296 | Fr. turn sig.lamp | 1 | |
| 16 | 181747 | Bulb 12V-5W | 1 | |
| 17 | 639297 | Fr. turn sig.lamp | 1 | |
| 18 | 181747 | Bulb 12V-5W | 1 | |
| 19 | 008457 | Self-tap screw M4,2x19 | 2 | |
| 20 | CM017406 | Plate | 2 | |
| 21 | 640924 | Right turn indicator support | 1 | |
| 22 | 640923 | Left turn indicator support | 1 | |
| 23 | 844252 | screw | 2 | |
| 24 | 006078 | Plain washer 12x5.2x1 | 2 | |
| 25 | 003055 | Plain washer 5,4x10x0,8 | 2 | |
| 26 | 012112 | Nut | 2 | |
| 27 | 6391025 | | 1 | |
| 28 | 181746 | Lamp 12V-10W | 1 | |

| | |
|---|---|
| **Group** | Electrical system |
| **Code** | 06.03 |
| **Description** | Front headlamps - Turn signal lamps |
| **Service** | 1 |

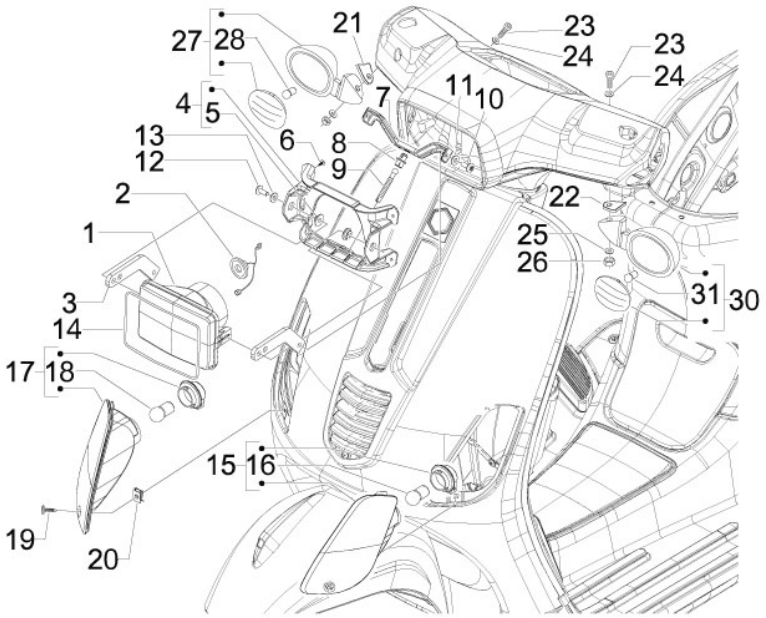


| Pos. | Code | Description | Qty | Variants |
|---|---|---|---|---|
| 30 | 6391015 | | 1 | |
| 31 | 181746 | Lamp 12V-10W | 1 | |

| | |
|---|---|
| **Group** | Electrical system |
| **Code** | 06.04 |
| **Description** | Rear headlamps - Turn signal lamps |
| **Service** | 1 |

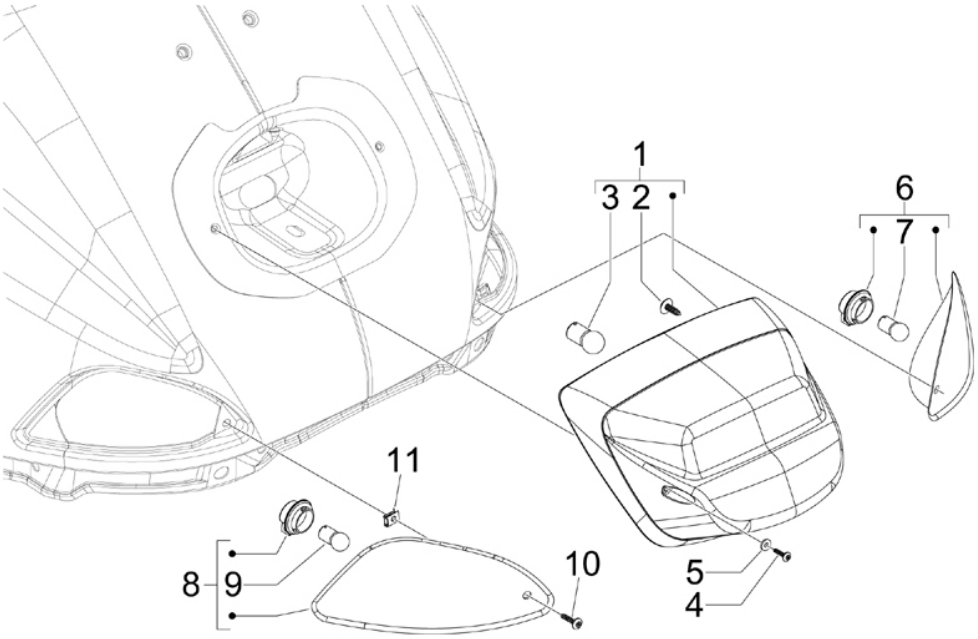


| Pos. | Code | Description | Qty | Variants |
|---|---|---|---|---|
| 1 | 58264R | Taillight unit | 1 | |
| 2 | 640813 | Special cap screw | 2 | |
| 3 | 129953 | Lamp 12V-21/5W | 1 | |
| 4 | 015996 | Screw M4x12 | 2 | |
| 5 | 013769 | Washer | 2 | |
| 6 | 58177R | Right rear turn indicator | 1 | |
| 7 | 584332 | Lamp 12V-10W | 1 | |
| 8 | 58176R | Left rear turn indicator | 1 | |
| 9 | 584332 | Lamp 12V-10W | 1 | |
| 10 | 008372 | Screw d3,5x13 | 2 | |
| 11 | CM017405 | Spring plate | 2 | |

| | |
|---|---|
| **Group** | Electrical system |
| **Code** | 06.05 |
| **Description** | Remote control switches - Battery - Horn |
| **Service** | 1 |

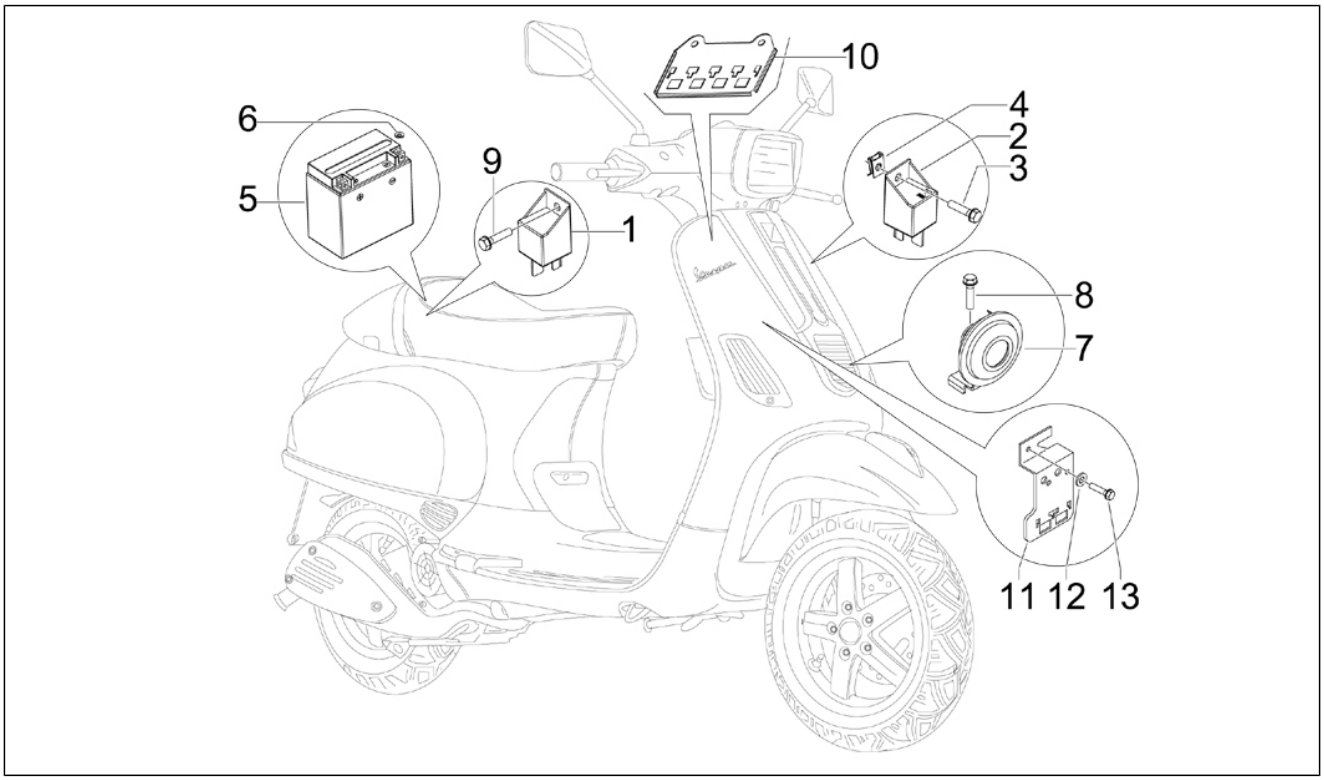


| Pos. | Code | Description | Qty | Variants |
|---|---|---|---|---|
| 1 | 58115R | Starter relay 12V-80A | 1 | |
| 2 | 58246R | Rem. control switch 12V-30A | 2 | |
| 3 | 259349 | Screw M4,2x13 | 1 | |
| 4 | CM017409 | Spring plate | 1 | |
| 5 | 584810 | Battery 12V-9Ah | 1 | |
| 6 | 016406 | Spring washer 6,4x11,8x1 | 2 | |
| 7 | CM071814 | Horn 12v cc | 1 | |
| 8 | B016777 | Screw w/ flange M6x16 | 1 | |
| 9 | B016426 | Screw w/ flange M6x14 | 1 | |
| 10 | 639640 | Relay fixing bracket | 1 | |
| 11 | 639340 | Bracket | 1 | |
| 12 | 012528 | Washer | 1 | |
| 13 | 484123 | Screw w/ flange | 1 | |

| | |
|---|---|
| **Group** | Electrical system |
| **Code** | 06.06 |
| **Description** | Voltage Regulators - Electronic Control Units (ecu) - H.T. Coil |
| **Service** | 1 |

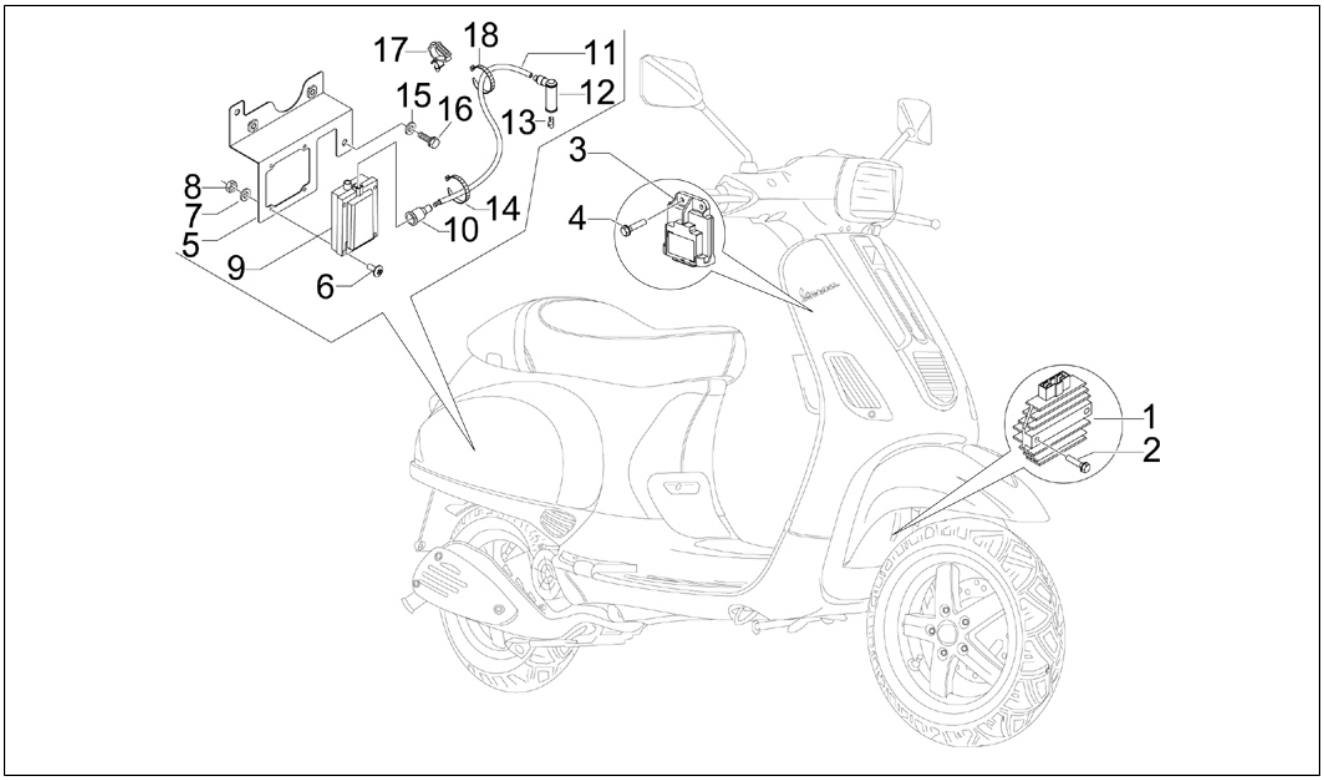


| Pos. | Code | Description | Qty | Variants |
|---|---|---|---|---|
| 1 | 641788 | Voltage regulator (Langfang Kokusan) | 1 | |
| 2 | B016777 | Screw w/ flange M6x16 | 1 | |
| 3 | CM088402 | Electronic ignition unit | 1 | |
| 4 | B016777 | Screw w/ flange M6x16 | 2 | |
| 5 | 641237 | H.v. coil fix bracket | 1 | |
| 6 | 583236 | screw M3x20 | 4 | |
| 7 | 012554 | Washer 3.2x5.7x0.9 | 4 | |
| 8 | 020003 | Nut M 3 | 4 | |
| 9 | 58120R | HT coil | 1 | |
| 10 | 071671 | Insulating cap | 1 | |
| 11 | 080341 | H.V. cable | 1 | |
| 12 | 639498 | Scr. sparkplug cap | 1 | |
| 13 | 015014 | End cap | 1 | |
| 14 | 145298 | Lock-strap L=180mm | 2 | |
| 15 | 016406 | Spring washer 6,4x11,8x1 | 2 | |
| 16 | B016777 | Screw w/ flange M6x16 | 2 | |
| 17 | 217280 | Hose clamp | 1 | |
| 18 | 257134 | Lock-strap L=277 | 1 | |

| | |
|---|---|
| **Group** | Electrical system |
| **Code** | 06.08 |
| **Description** | Main cable harness |
| **Service** | 1 |

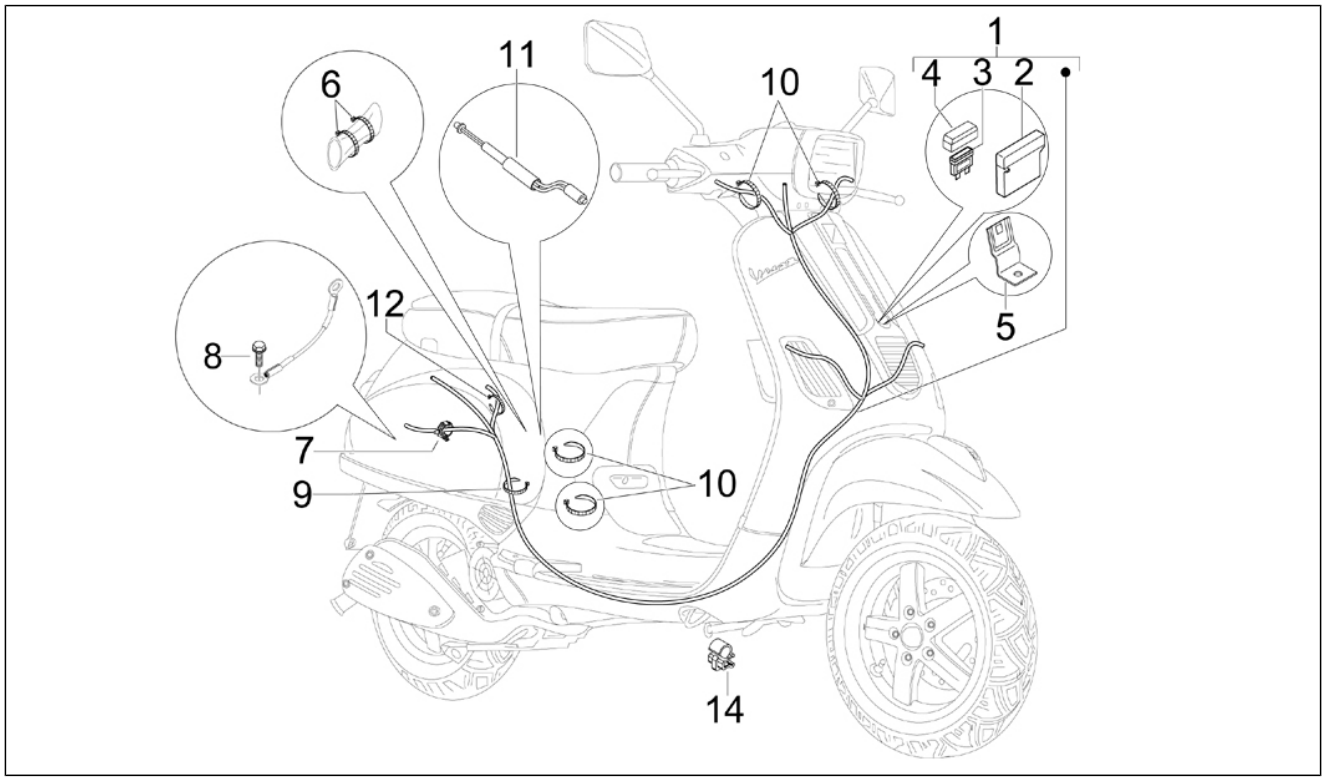


| Pos. | Code | Description | Qty | Variants |
|---|---|---|---|---|
| 1 | 641402 | Frame harness | 1 | |
| 2 | 580653 | Fuse holder | 1 | |
| 3 | 252945 | Fuse 7,5A | 1 | |
| 3 | 290860 | Fuse 15A | 1 | |
| 3 | 292507 | Reed fuse 10A | 1 | |
| 4 | 290404 | Cover | 1 | |
| 5 | 642076 | Fuse support bracket | 1 | |
| 6 | 145298 | Lock-strap L=180mm | 6 | |
| 7 | CM006903 | Pipes/cables retainer spring | 1 | |
| 8 | 031089 | Hex screw M6x18 | 1 | |
| 9 | 217280 | Hose clamp | 1 | |
| 10 | 145298 | Lock-strap L=180mm | 7 | |
| 11 | 582619 | Resistor Module | 1 | |
| 12 | 639082 | Hose clamp | 1 | |
| 14 | CM013202 | Pipes/cables retainer spring | 3 | |